TECHNICAL DATA SHEET

evolution MAX 2021 ig



MAXIMUM BENEFITS WITHOUT COMPROMISES

Maximum benefits with no compromises.
The most advanced model in the Evolution line with a 10" SmartTouch.
Controls, maximum efficiency, and user comfort.
Cooking automation, Wi-Fi.
Connectivity, smart care system.

KEY BENEFITS

- **TrustBuilt construction** | Built to endure. Robust frame. Minimum plastic parts. Seamless AISI 316L s/s cooking chamber with 10-year warranty. Maximum hygiene.
- **TrueSteam** | Almost unstoppable. Time-optimized SmartRegulation. Refined heating elements.Twostep preheating. Built-in heat exchanger. Energy and water savings.
- **ErgoFit** | Ergonomic design. Crosswise-oriented racks. Up to 39 % less physical strain. Safer movement. Healthier backs. Chefs with ease.
- **FastReact UI** | Instant, intuitive interface. Responds without delay. Smoother kitchen flow. Less stress. More focus on cooking.

TECHNICAL DATA SPECIFICATION

Capacity (GN):	20 × GN 2/1
Capacity (meals):	600 - 900
Heat source:	Gas
Dimensions:	1167 x 1890 x 1088 mm
Total power:	1,6 kW
Steam generator:	i - injection

Flavor under the crust

TrueSteam	Perfect results. Almost unstoppable. Two-step preheating. Built-in heat exchanger. Energy and water savings.
Multiple fan speeds	Precise airflow adjustment. Suitable for all types of dishes. Fan safety brake for safe door opening.
5D PrecisionCooking	Optimises cooking dimensions: temperature, humidity, airflow, time and SmartRegulation. Delighted diners.
PreciseHumidity	Actively controls humidity. Keeps food colors vivid. Ensures consistent results. Maximizes yield.
DynaAirFlow	Enhanced cooking evenness. Increased capacity. Generous rack spacing.
Automatic flap valve	Optimized dehumidification. Crispier results. Golden color. Lower energy loss.
Core temperature probe	Precise core temperature control. Perfect results. Monitors hygiene compliance.
EasyCooking	Step-by-step chef guidance. Pre-set programs and cooking techniques. Great results made easy.
OnlineMenu	Hundreds of global Retigo recipes. Easy access with filters and search. Endless inspiration.
DeltaT Cooking	Perfectly cooked large pieces. Prevents undercooking. Precise results from core to surface.
Extra Programs	Part of EasyCooking. Sous-vide, Drying, Sterilization, Overnight cooking, Confit, and Smoking.
GoldenTouch	Perfectly crisp and golden gratins and baked dishes. Ideal color and texture.
MyControls	Customizable interface. Set user profiles, menu layout and default values. Your kitchen. Your setup.
FanTiming	Automatic airflow management. Better uniformity. Gentle preparation for delicate dishes.
Planning Calendar	Plan cooking in advance. Tracks key maintenance events. Ensures hygiene and uptime.

Profit under the control

EvoCare	Complete care: cleaning, descaling, aintenance, diagnostics.
EvoCleaning	Automatic cleaning. Cost-efficient. Rinses, decalcifies, and protects. Contains anti-corrosive agents.
EcoLogic	Monitors energy consumption. Transparent data on display. Supports sustainable kitchen operation.
Internet Connectivity	Remote access and control. Automatic SW updates possible. Remote service support possibility.
CombiOnline	Simple and secure connection. Recipe management. Remote control. Operation statistics.

Ease under the load

Maximal number of **programs** / max. number of **steps** 1000/20

ErgoFit	Ergonomic design. Up to 39% less physical strain. Safer movement. Healthier backs. Better kitchen workflow.
FastReact UI	Instant and intuitive interface. Quicker response. Smoother workflow.
Hand shower	Convenient basting. Simple GN refills. Instant oven rinsing.
Regen&Hold	Food regeneration and holding. Directly from the main screen. Fast access. Smooth workflow.
ReadyTemp	Rapid cooling. Quick access from the main screen. Desired temperature ready when you are.
RackTiming	Prepares multiple dishes at once. Individual timers and core temp control. Adjustable per rack or GN
Top&Last	Quick restart of the most used or last-used programs. Saves time. Speeds up daily workflow.
Touch&Cook Menu	Pictogram-based interface. Maximum intuitiveness. Perfect for less experienced staff.
Learning Function	Saves all in-process changes. Perfect for fine-tuning and repeating successful results.
PanoramicView Door	Wide chamber view. Full visual control without opening the door. Designed for open kitchens.
Multitasking	Use the display during cooking. Plan ahead. Improve kitchen workflow.

Confidence under pressure

TrustBuilt construction	Robust frame. Minimum plastic parts. Seamless AISI 316L s/s cooking chamber. Maximum durability.
LED Lighting	Bright, true-color illumination. See the real food doneness. Built to last.
CombiHealth	Real-time oven condition. Health percentage shown on the main screen. Stay ahead with preventive care.
Integrated Fat Separator	Minimizes smoke and burnt fat odors. Cleaner cooking environment. Ideal for open kitchens.
HACCP Records	Instant records of critical points. Easy access. Proves hygiene compliance.

SPECIFICATION

Energy	gas
Steam generator	injection
Capacity	20 × GN2/1
Capacity of meals	600–900
Spacing	-
Max. quantity per drawer	30 kg
Max. quantity of food per load*	180 kg
Dimensions (w × h × d)	1167 × 1890 × 1088 mm
Weight of unit without packaging	-
Weight of unit with packaging	-
Total power	1,6 kW
Heat power	-
Nominal heat load (Gas G20)	78 kW
Steam generator power	-
Fuse protection	16 A
Voltage	1N~(2~)/220-240 V / 50-60 Hz
Recommended power cable H07RN-F	3G1,5
Recommended AWG cable	14
Water | Drain connection	G 3/4" | 50 mm
Pressure hose	1 / 2"
Water pressure [bar]	2,0-6,0
Gas connection	G 1"
Noise level	max. 70 dBA
Temperature	30–300 °C

*** Weight must be evenly distributed!**

WATER QUALITY

Input pressure	200-600 kPa (2-6 bar)
Water hardness (TH)	≤ 5°dH
Total amount of dissolved substances	40 - 150 ppm (mg/l)
pH	7,0 - 8,5
Free chlorine	< 0,1 ppm (mg/l)
Total chlorine	< 0,1 ppm (mg/l)
Chlorides	< 40 ppm (mg/l)
Iron	< 0,1 ppm (mg/l)
Silicon dioxide	< 13 ppm (mg/l)

WATER CONSUMPTION

Average consumption of treated water without cleaning (l/hour)	17
Average consumption of treated water, including cleaning (l/hour)	17
Maximum possible flow rate of treated water (l/min)	0,8
Average consumption of untreated water without cleaning (l/hour)	10
Maximum possible flow rate of untreated water (l/min)	7

DIMENSIONS

Product without package

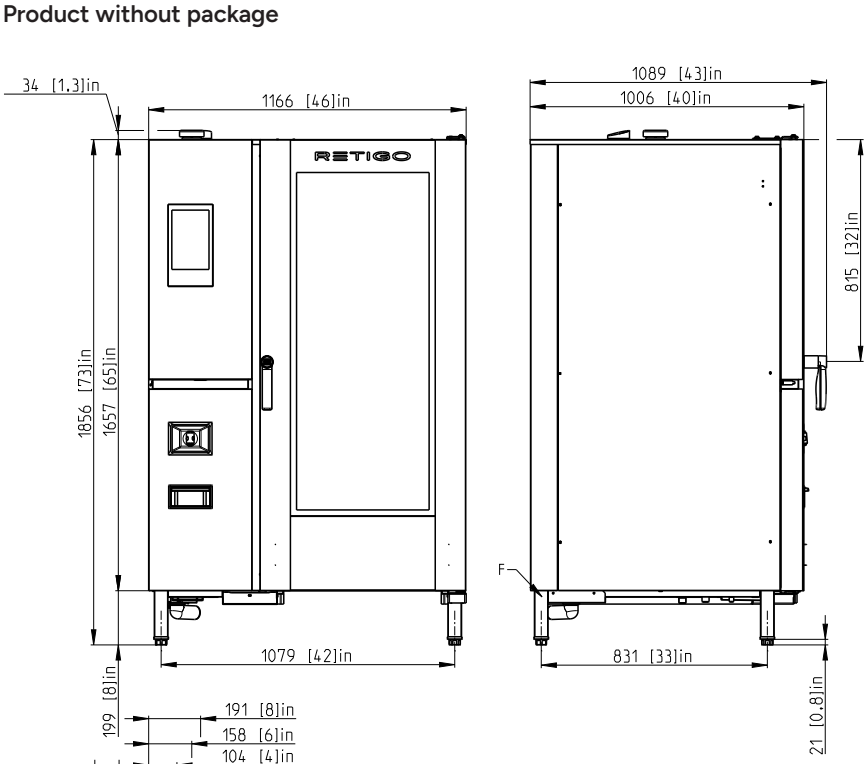

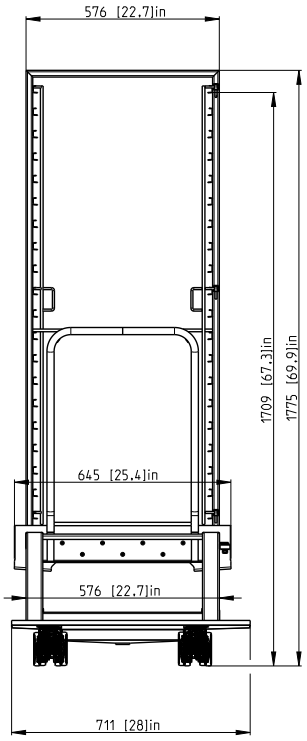

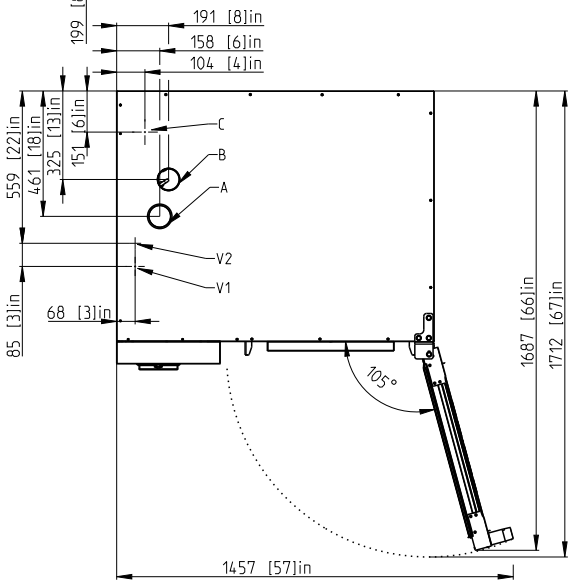

A – flap valve
B – chimney
C – drain connection
E – electrical connection
V1 – untreated water
V2 – treated water

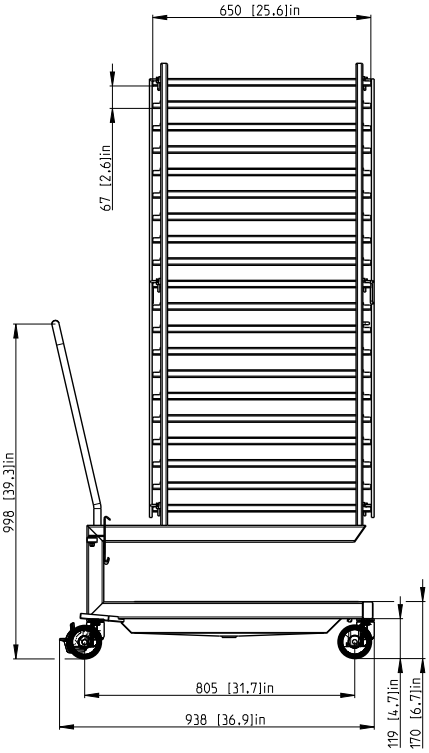

SAFETY CLEARANCES

Rear	50 mm (2")
Left side	50 mm (2")
Right side	50 mm (2")