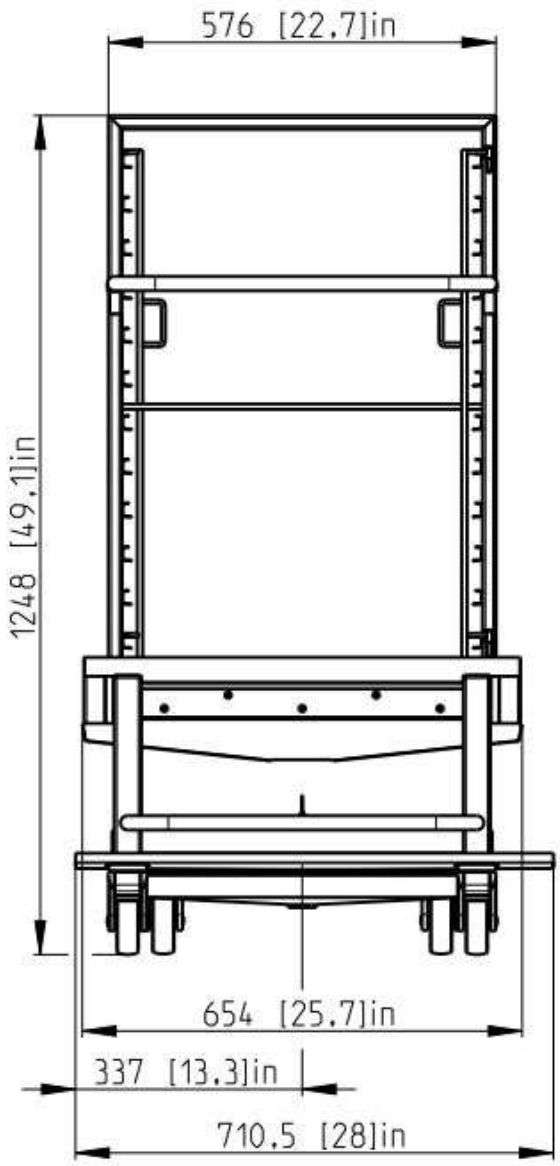
576 [22,7]in
1248 [49,1]in
654 [25,7]in
337 [13,3]in
710,5 [28]in

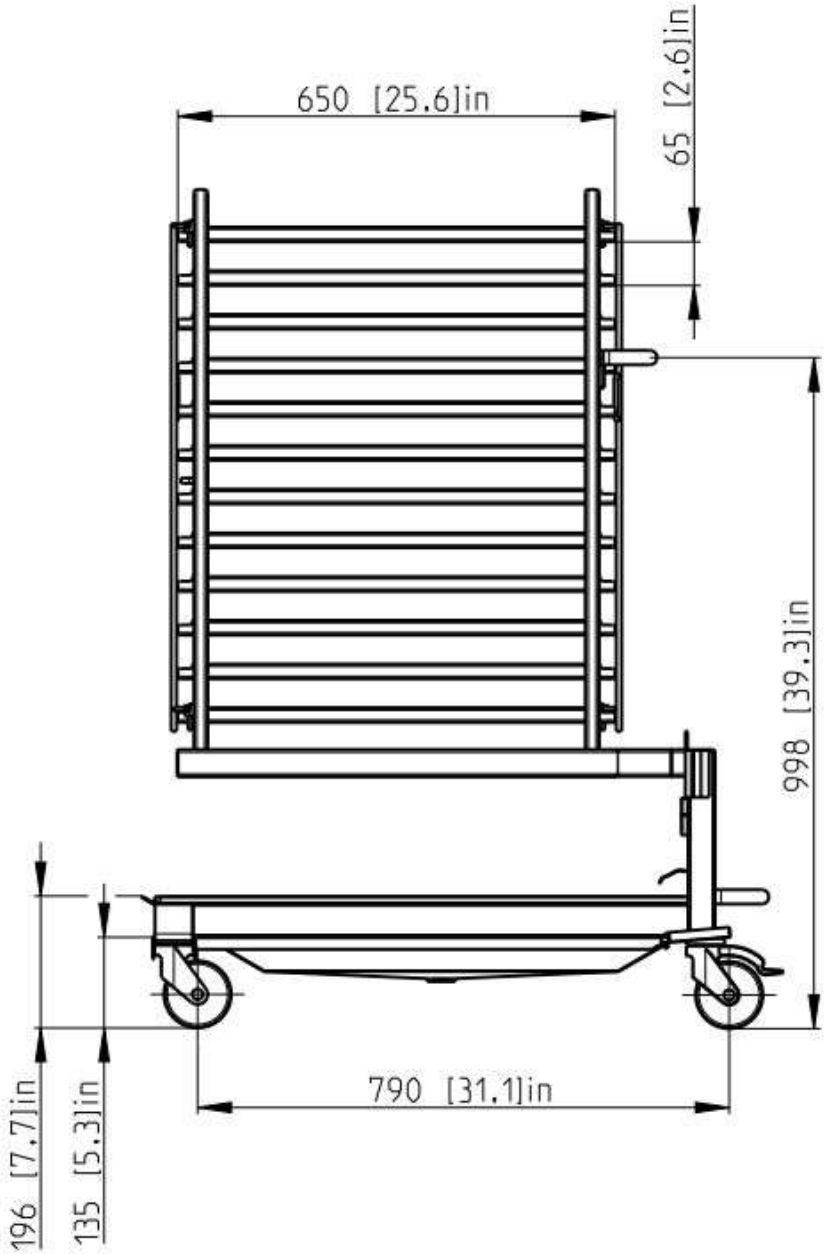
650 [25,6]in
65 [2,6]in
998 [39,3]in
790 [31,1]in
196 [7,7]in
135 [5,3]in

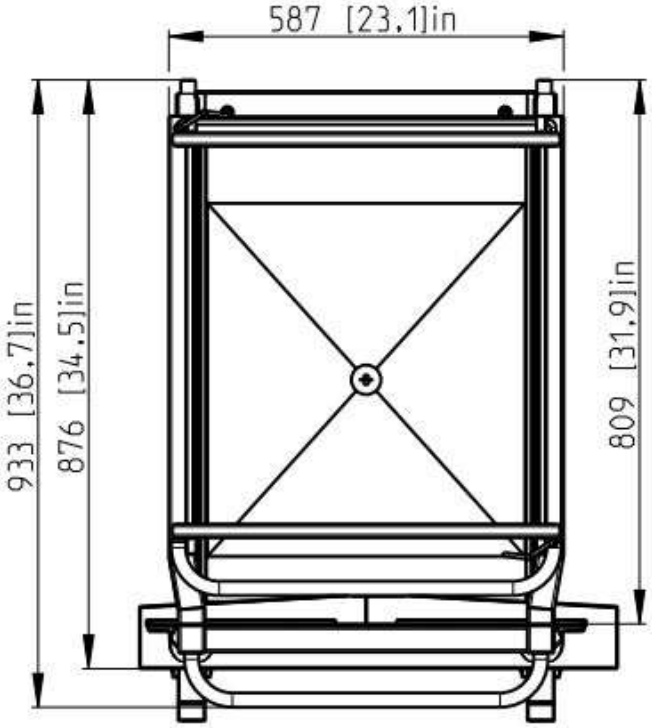
587 [23,1]in
933 [36,7]in
876 [34,5]in
809 [31,9]in