retigo®

COMBI OVEN SPECIALIST

Combi oven
Orange Vision

OPERATING MANUAL

Complete operation manual could be found here



READ THIS MANUAL BEFORE USE

CONTROL PANEL

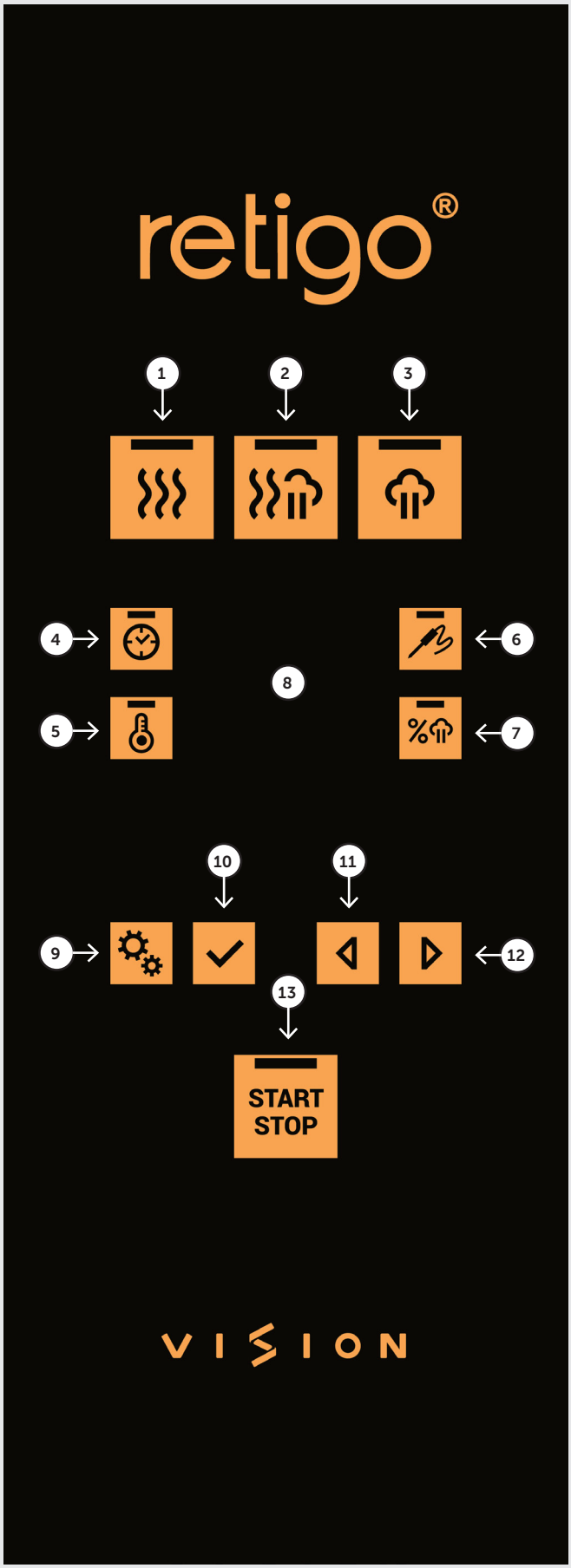

1	HOT AIR MODE
2	COMBINATION MODE
3	STEAMING MODE
4	TIME
5	TEMPERATURE IN COOKING CHAMBER
6	CORE PROBE TEMPERATURE
7	LEVEL OF MOISTURE
8	DISPLAY WITH ACTUAL VALUES
9	FUNCTIONS / BACK
10	CONFIRMATION / ENTER
11	LEFT ARROW
12	RIGHT ARROW
13	START / STOP OF CURRENT PROCESS

BASIC INFORMATION

Complete operation manual could be found here

VALIDITY OF DOCUMENTATION

This manual applies to the RP type appliance and the following models:

ELECTRICAL MODELS

2E0623IZ, 2E0611IZ, 2E0611BZ, 2E1011IZ, 2E1011BZ, 2E2011IZ, 2E2011BZ, 2E1221IZ, 2E1221BZ, 2E2021IZ, 2E2021BZ.

GAS MODELS

2G0611IA, 2G1011IA, 2G2011IA, 2G1221IA, 2G2021IA.

USE: ITS PURPOSE

The ORANGE VISION combi oven is a universal appliance for preparing meals, including complete menus. It can be used for all types of food preparation methods based on heat, for example baking, frying, grilling, stewing, steam cooking, low-temperature overnight cooking, etc. The process is performed either in manual mode or in automatic mode utilising programs.

INTENDED USE OF THE COMBI OVEN

- The equipment can be used only for heat preparation of various types of food. This involves steam, hot air or a combination of the two. The food must always be placed in a standardized cooking container, baking trays dimensioned for baking or standard accessories exclusively from the manufacturer.
- The equipment used must be made of stainless steel, ceramics, heat-resistant plastic or enamelled steel.
- The combi oven is exclusively for professional use in the culinary field.

CORRECT USE OF THE COMBI OVEN

The following must not be placed inside the combi oven:

- no food in closed cans or packages

- no easily combustible objects with an ignition point lower than 260°C, such as easily combustible oils, fats or cloths

- no dry powder or granulate

INTRODUCTION: MAIN PARTS

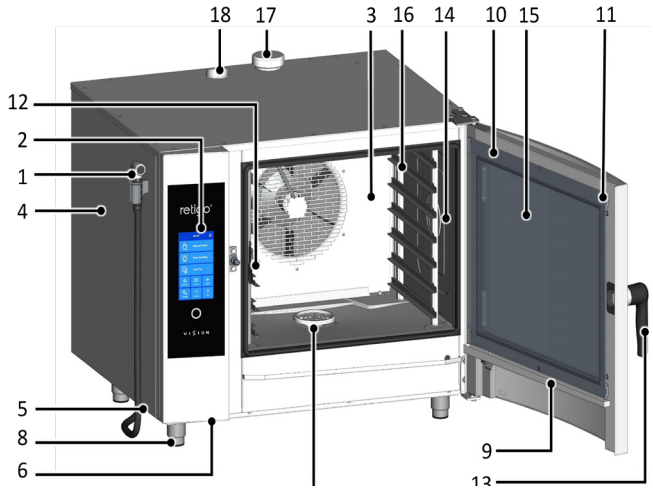

1. Self-winding hand shower – The standard configuration includes a shower hung on the left side of the machine.
2. Control panel
3. Detachable interior wall in front of fan
4. Side cover
5. Air and dust filter
6. USB connector
7. Drain cover
8. Height-adjustable legs
9. Condensation drip pan for the inner glass with automatic draining
10. Door with rounded exterior glass
11. Bolts for gripping interior glass
12. Temperature probe
13. Door handle
14. Interior lighting
15. Interior opening glass on door
16. Rail racks for cooking containers – Sizes 2011, 1221, 2021 have a loading trolley instead of rail racks.
17. Excess steam venting flap
18. Vent flue

Any use of the combi oven including modifications to safety or operational components, is considered unintended use. The company accepts no liability for damages due to such use; the user bears all risk.

The user is also responsible for abiding by the conditions prescribed by the manufacturer for installation, operation and maintenance of the appliance, which must be maintained and repaired only by persons familiar with it and instructed on its hazards.

SAFETY DURING USE

The combi oven cannot be operated without a certain amount of caution, alertness and common sense. Even though the combi oven has been designed and manufactured to meet all international safety standards, the user bears primary responsibility for his or her safety while operating the combi oven. The manufacturer bears no responsibility for personal injury, equipment damage or environmental damage caused by failure to operate the combi oven according to the manual or by failure to follow applicable safety regulations.

This chapter provides the most important information on working safely and protecting the health of the user and all others who come into contact with the combi oven or its accessories.

SAFE OPERATION

GENERALLY

- The combi oven may only be used by personnel authorised, qualified and trained for operating it. Persons who are not authorised to use and have not been trained in its operation must never be allowed to handle or maintain it, or to perform any activity contrary to its use. Such unprofessional activity may cause injury or damage the appliance.
- Get regular training on how to operate the combi oven. This prevents occupational injuries and damage to the combi oven.
- This combi oven is to be used only for food preparation and in compliance with the manual. Any other use is in conflict with its purpose and is considered dangerous.
- For safety reasons, do not remove the hard covers or try to get inside the combi oven - risk of injury by electrical shock. The device contains no components that the user can handle. Repair of any defects or maintenance beyond that described in this manual must be done by a qualified service technician.
- Do not install any heated equipment in the immediate area of the combi oven (such as fryers, grills, cookers, hot plates, etc.).

Detailed requirements for placing the appliance are given in the instructions for transport and installation.

- Do not work with the combi oven if you suffer from dizziness, fainting or other weakness or lack of concentration or if under the influence of drugs or alcohol!
- It is strictly forbidden to remove or damage the labels fastened to the combi oven.
- Only operate the combi oven in perfect working order. Do not make any changes to it.
- Follow the prescribed inspection plan, follow the instructions in the operating manual, adhere to generally valid regulations for gas appliances.
- Do not place any items in the vicinity of the combi oven, which you could trip over. Keep the workplace (including access ways) clean and tidy.

COMBI OVEN OPERATING ENVIRONMENT

- The permitted ambient temperature range is +4 °C to +35 °C.
- The environment must not be explosive or toxic.
- A fire extinguisher or an automatic fire extinguishing system must not be located directly above the combi oven.
- There must be no flammable materials, gasses or liquids located underneath or next to the combi oven.

BEFORE USING THE COMBI OVEN

- Before starting the appliance, it is absolutely necessary to learn the chapter **"Safety during use"**, along with this chapter.
- If you have any doubts about the combi oven's installation, operation or safety, contact your supplier.
- If the electrical equipment is damaged in any way, arrange repairs immediately — never use a damaged combi oven.
- Do not block the combi oven's vents with objects, and especially do not place cooking utensils, fabrics or other items on the appliance. Make sure that steam freely escapes from the vents at the top of the combi oven.
- Before using, check the combi oven's cooking chamber. Remove all remaining food, cleaning agent residues or other objects, and thoroughly rinse the cooking chamber with the hand shower.
- Be sure not to sprinkle or spray water on the combi oven, and not to place objects filled with water on it.
- Do not place sources of open flame on or near the combi oven.

DURING USE OF THE COMBI OVEN

- Do not continue using the combi oven if you have the slightest doubt as to its safe operation or whether it is damaged. Turn it off immediately, unplug the power cable, shut off the water supply, and contact your supplier.
- In the event that while using the combi oven you register an increased noise level exceeding the permitted limit, stop the combi oven and remedy the cause.
- Immediately report all faults to your superior, who must arrange for their repair.
- Do not leave the combi oven unattended while it is turned on, unless explicitly instructed to by the manual.
- Use only your fingers to operate the control panel buttons. Using sharp, pointed or other objects to operate the appliance voids the warranty.
- When working with the combi oven, be aware that cooking containers, cooking inserts and grates can be hot. The temperature of the external glass on the door may reach temperatures higher than 60 °C. In all cases there exists a risk of burns.
- Hot steam is generated while the combi oven is running – when the door is opened, there is a risk of scalding, etc. When opening the door, especially during steam operations, always stand in such a way that you cannot be scalded by the steam escaping from the open door. Open the door only partially and open fully only once the steam has escaped.
- If gastronorm containers are more than three-quarters filled with liquid, greater care must be taken when handling and removing them. When placing containers this full into the appliance, put them only in racks into which you can see. Otherwise, the user may be scalded. Take great care when removing hot cooking containers — whatever their content!
- Be especially careful when working with a combi oven (set of appliances) whose highest rack is 160 cm or higher above the ground. Here there is a risk that the gastronorm container may flip over and cause burns.
- Hot areas may form during the cooking process, especially on the cookware, grills and the inner side of the door. Use protective gloves whenever handling hot objects.
- It is forbidden to start the fan without the cover.

- If the combi oven is equipped with a ride-in trolley, then you must always brake the trolley once inside the appliance. When handling a full trolley, the gastronorm container locking mechanism must always be used (GNs are closed).
- When transporting gastronorm containers filled with a liquid, they must be covered with sealing lids. Otherwise, the user may be scalded.
- In the event that the floor is very uneven, ride-in trolleys must not be used for riding into or out of the combi oven. Never leave the trolley handle inside a closed combi oven. The combi oven door could be broken. Do not pull the ride-in trolley without the handle designed for this purpose. Otherwise, this may result in burns.
- When using banquet trolleys, always make sure that the plates are correctly seated on the stands.
- For cleaning the trolleys, always use the automatic cleaning program (if available). Otherwise, use cleaning products designed for semi-automatic cleaning. It is not permitted to use the combi oven without the ride-in trolley for standard work and automatic cleaning!

AFTER YOU HAVE FINISHED WORKING WITH THE COMBI OVEN

- Perform cleaning and service only when the combi oven is cold!
- Remove solid pieces of food by taking them out of the cooking chamber — never wash them down the combi oven's drain.
- Cleaning and descaling agents are to be used only according to the instructions in this manual and in compliance with the instructions for the individual agent.
- After work (e.g. overnight), leave the combi oven's door ajar.
- When the combi oven is not used for an extended period of time, shut off the water and power supply.

CLEANING

- Use extra caution when handling cleaning agents. Contact with cleaning agents and their fumes pose a hazard of burns or irritation to skin, eyes and respiratory organs.
- When handling cleaning agents, wear safety equipment.
- When dosing powdered cleaning agents, be extra cautious that they are not inhaled and do not come into contact with eyes and mucous membranes.

PROTECTIVE AIDS

When operating the combi oven, it is also necessary to wear the right clothes and use personal protection gear. Clothing, shoes and protective gear must comply with national safety requirements for your type of work. Especially do not forget to use these important items:



When working with the combi oven, we do not recommend wearing:

- Scarves, neck ties, chains, watches, bracelets, keys, rings or other metal objects, or work with an inappropriate bandage on.
- Electrical components such as heart pacemakers, watches, credit cards, etc., or other items with magnetic recording media.
- Long, loose hair. Secure long hair with an appropriate head covering.

PROTECTIVE ELEMENTS OF THE COMBI OVEN

The combi oven is equipped with safety elements that make it safer to operate. Here is a list of the most important ones:

1. **External main switch**
2. **External covers**
3. **Protective temperature limiter**
4. **Control panel**
5. **Door with magnetic lock**
6. **Ventilation position of the appliance door**
7. **Internal wall**

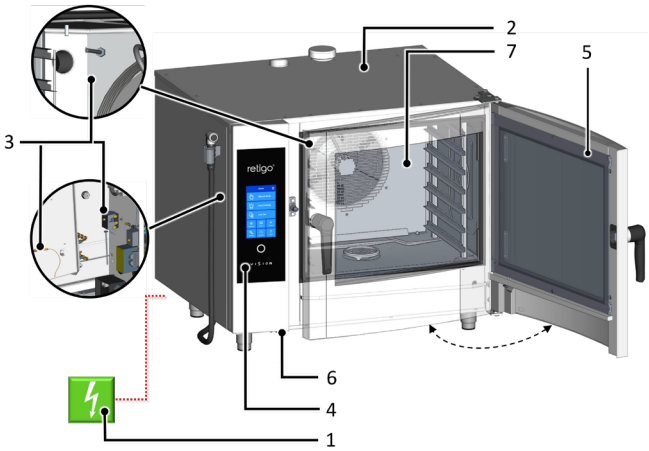

None of the elements below are intended to be removed by the operator. It can be removed for inspection, maintenance or repair only by a person qualified for the task.

EXTERNAL MAIN SWITCH

The combi oven is designed for permanent connection to the power grid. Connect and disconnect the power supply using an external main switch. The switch is used for turning the appliance on and off (when starting operation, making repairs, installing, and also in emergencies). The external main switch must be easily accessible at all times!

It is forbidden to tamper with safety circuits, to remove the side covers, or to perform any unauthorised changes, which change the reliability and safety of these circuits.

EXTERNAL COVERS

All removable covers are firmly connected to the combi oven, so they can be removed only with tools. Covers prevent unintentionally touching parts carrying electricity. Always check whether the covers are in place.

PROTECTIVE TEMPERATURE LIMITER

Protective temperature limiters are located in the cooking chamber, boiler and electrical panel. When there is excessive temperature, these elements activate and turn off the appliance.

If a protective limiter fails, an error code displays accompanied by an audible signal.

CONTROL PANEL

The control panel is located outside the area prone to high temperatures and makes it possible to quickly turn off the appliance using the STOP button. The display also shows malfunctions.

The control panel is securely fixed to the front control panel and prevents unintentionally touching conductive parts. It can be removed only with a tool.

DOOR WITH MAGNETIC LOCK

The moment the door opens, the heat automatically shuts off and the fan quickly stops to limit the escape of steam from the cooking chamber. To protect against steam scalding, first open the door slightly and wait a while before opening it fully. To close the door, push on the handle (by slamming). If you have a machine with the ride-in trolley (2011, 1221, 2021) close the door and turn the door handle clockwise by 90°.

If the door is not closed properly and the appliance is in the **Start** mode, a "close door" prompt will appear.

VENTILATION POSITION OF THE APPLIANCE DOOR

To protect against steam scalding, the doors can first be opened slightly. In this position, the doors remain partly locked. Once steam stops coming out of the cooking chamber, the door can be opened completely.

INTERNAL WALL

It is always located inside the cooking chamber in front of the fan so as to prevent striking against the fan's rotating wheel. The internal wall can only be removed with tools.



Under no circumstances should you remove any safety or protective element of the combi oven! Do not make any changes to it without the permission of the manufacturer.

DANGEROUS LOCATIONS AND RESIDUAL HAZARDS

The combi oven is designed so that when properly used in perfect technical condition, it poses no danger to the user or surroundings. Nonetheless, during its operation, situations may arise that could be dangerous if the user is not aware of them. These are called residual hazards — those that remain even after all preventive and protective measures have been considered and implemented. Learn more about these risks and avoid them.

Dangerous locations, types of hazards and their effects.

COOKING CHAMBER

While it works, the combi oven creates high-temperature steam in the cooking chamber.



- Burning hazard from hot places throughout the chamber
- Scalding hazard from hot steam produced during the cooking process
- Scalding hazard from hot steam escaping the cooking chamber when the appliance door is opened.

FAN

In the combi oven's cooking chamber, behind the internal wall, there are one or more circulating fan wheels.



- Hand injury hazard from careless handling in the cooking chamber behind the inside wall when it is not properly installed in place.
- Hand injury hazard from careless handling in the cooking chamber behind the inside wall during cleaning or maintenance.

DOOR

The inside of the door and especially the internal glass heat up to a high temperature when the combi oven is working. The combi oven also creates hot steam that escapes when the door of the cooking chamber is opened.



- Risk of burns from the inside of the door when opening the door during or after the cooking process.
- Risk of scalding by hot steam and fumes when opening the appliance, and especially when the top of the door is at face level, as it is with sets of two combi ovens.

UPPER COVER OF APPLIANCE

Never cover the appliance or place on it any objects that may catch fire. Your appliance is not a storage shelf!

Be careful and use safety gloves.



- Risk of burns during the cooking process.
- Fire hazard if the cover is covered or if flammable materials are on the cover during the cooking process.

GASTRONORM CONTAINERS

Never handle containers containing hot liquids or hot liquid food above eye level, and always use safety gloves.



- Risk of burns when handled carelessly and when protection aids are not used.

FLAP AND CHIMNEY

Do not place any part of the body above these parts and always use protective gear (gloves, safety glasses, etc.).



- Burning hazard from steam escaping during the cooking process

EXHAUST DISCHARGE

Do not place any part of the body above these parts and always use safety gear (gloves, safety glasses, etc.).



- Burning hazard from hot flue gases escaping during the cooking process.

HAND SHOWER



- Scalding hazard when showering the hot cooking chamber.
- Do not use the hand shower to cool the cooking chamber or for cleaning if its temperature is higher than 90°C.
- Scalding hazard from hot fat and steam when water splashes into hot fat.
- Do not spray water directly into hot fat — this may cause spattering and intense heat creation.

Residual risks

To further reduce risks and to ensure the effectiveness of safety protection we provide information about residual risks. To remove them, we establish the following technical and organizational measures for implementation by the user. These are intended to overcome the respective hazards.

ELECTRICAL CURRENT

All of the combi oven's electrical components are powered by potentially fatal current. The power supply terminals and other electrical components remain under voltage even when the combi oven is turned off.



- Injury hazard from electrical current from conductive parts

However, access to the area with electrical components is only possible after removing a rigid cover. As the user, you are not authorized to service the appliance's electrical components. There is only a hazard if the electrical supply cable is damaged, such as when inappropriately placed, twisted, pinched, weighed down, etc.. Moreover, if the appliance moves by itself on the wheeled frame, this may break the supply cable.



- When operating the appliance, always lock the wheels with the parking brake!

If there is any damage to the electrical equipment, it is necessary to stop using the combi oven immediately and arrange immediate repair by authorized service personnel.

If it is not necessary to have the combi oven under live current, disconnect the main power supply by turning off the main power switch.

MECHANICAL PARTS

Hazards arise only when the combi oven has been installed on the wheeled frame or has been installed incorrectly (such as on a strong tilt, not anchored on a slippery or unstable surface, etc.), and its unexpected movements may cause crushing or pinching when it looses stability.



- If you think the appliance is incorrectly, unstably installed, do not continue working, and immediately contact the owner to check the installation.
- Injury hazards from moving parts occur in situations where the cooking chamber is cooled with the doors open — "Cool down" function, the internal wall in front of the fan is missing, so that the fan wheel is freely accessible.

When handling the combi oven, adhere to the relevant regulations for tying loads and the handling of lifting equipment.



- Make sure the internal wall is always in its place and properly secured against loosening!
- Risk of hand injury may occur when sliding or pull out the loading trolley or loading basket.
- When handling loading accessories, always use the handle provided for the purpose.

HIGH TEMPERATURE

During the cooking process, the appliance's interior heats to a high temperature, including containers and food that have been inserted, and after the doors of the cooking chamber are opened, this heat escapes to the surroundings. For this reason, there is risk of burning or scalding when working with or near the combi oven.



- Risk of burns from hot surfaces mainly occurs in the entire cooking chamber, including the inside of the door, and on all parts that are or have been inside during cooking, such as cooking containers, handles of cooking containers and grates.
- Wear the prescribed safety clothing, especially safety gloves!
- A scalding hazard from hot steam can occur when water is sprayed into the warmed-up cooking chamber or the doors are open during "Cool down" function.
- Step far enough away from the appliance, and do not spray water into the warmed-up cooking chamber for fast cooling or when rinsing with the hand shower!



- A scalding hazard occurs if water is sprayed into the appliance when it holds a container with hot fat.
- Do not spray water into hot fat!
- There is also a water scalding hazard during improper handling of the cooking containers, when using cooking containers of inappropriate dimensions, and when using a plate of inappropriate dimensions in relation to the handle of the banquet trolley plate handles.
- When handling containers that hold hot liquids or hot liquid food, use extra caution and always use safety gloves.

DETERGENT

When detergents are used, there is a risk of burning or irritation to the skin, eyes and respiratory organs from direct contact with the cleaning agent or its fumes.



- Avoid direct contact with detergents. If there is risk of contact, use safety gloves.
- When dosing, be especially careful not to inhale the detergent.
- During full automatic cleaning, do not open the appliance door unless prompted by the software — there is danger of inhaling detergent fumes or splashing skin and eyes.

FOOD CONTAMINATION

When cleaning or descaling agents are used wrong, the area around the combi oven, where food is usually prepared, can become contaminated. Then they may become contaminated.



- Make sure the work surface has not been splashed with detergent or descaler!
- Do not place empty containers on the work surface — the food may get contaminated!

GAS

Gas combi ovens also pose these risks:



- Risk of explosion if the gas line is defective or leaky.
- There is a risk of an oxygen shortage in the kitchen if the burner is improperly adjusted, and of a lack of air in the kitchen if the exhaust line is leaky.
- Follow the prescribed inspection plan, follow the instructions in the manual, adhere to generally applicable regulations for gas appliances.

WATER

If the appliance and its wheeled cart begin making undesired movements, this may break or damage the water feed, and escaping water may cause slips and falls.



- Before operation, always check that the wheels are locked with the parking brake! Keep the combi oven's work area and surroundings clean and dry!

OPERATION

3.1 CONTROL PANEL

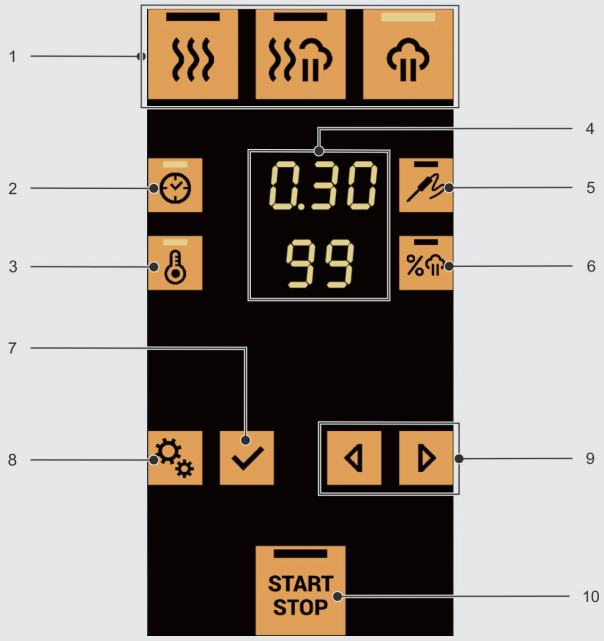

The combi oven is equipped with a touch control panel. Individual functions are selected by gently "tapping" a button.

1. Cooking mode selection
2. Setting the time
3. Setting the cooking chamber temperature
4. Display with values
5. Setting the temperature probe temperature
6. Setting the humidity level
7. OK (confirmation/enter)
8. Function / back
9. Navigation arrows
10. Start / stop the cooking process

3.2 DESCRIPTION OF THE BUTTONS

HOT AIR MODE
Sets the hot air cooking mode according to presettings. The settings can be changed as needed.

HOT AIR WITH STEAM MODE
Sets the cooking in set humidity mode according to presettings. The settings can be changed as needed.

STEAMING MODE
Sets the steam cooking mode according to presettings. The settings can be changed as needed.

TIME
Serves to set the cooking time.

TEMPERATURE IN COOKING CHAMBER
Serves to set the cooking temperature.

TEMPERATURE ON THE TEMPERATURE PROBE
Serves to set the temperature on the temperature probe.

HUMIDITY LEVEL
Serves to set the humidity in the hot air with steam mode.

FUNCTION / BACK
Serves to enter other submenus and also serves as a "BACK" button. Other options:

FLAP VALVE (optional accessory)
Allows the flap valve to be opened or closed if excess humidity needs to be vented from the cooking chamber.

MANUAL HUMIDIFICATION
Enables additional humidity to be added

FAN SPEED (optional accessory)
Serves to change the fan speed.

PREHEATING
Enables the setting of a preheat mode for the cooking chamber before the cooking process, or alternatively for cooling the cooking chamber when it is too hot.

PROGRAMS (optional accessory)
Enables the launching and managing of saved programs.

DELAYED START
Serves to set the start time for the cooking process.

SETTINGS
Displays the user settings menu.

WASHING
Serves to start washing according to a washing program.

OK (CONFIRMATION/ENTER)
Serves to confirm the settings or functions and to enter menus and submenus.

LEFT AND RIGHT NAVIGATION ARROW
Serves to increase or decrease parameter settings and for navigation in the individual submenus.

START / STOP THE COOKING PROCESS
Serves to start / stop the cooking process.
By holding down the button (longer than 3s), the combi oven enters sleep mode, where the entire display goes blank and the button flashes only briefly. To resume activity, simply press the button again.

MAINTENANCE

GENERAL INSTRUCTIONS

For the entire period of operation, the appliance must undergo regular inspections, tests and updates for operating this type of appliance in accordance with applicable regulations in the country of use.

The appliance must be kept clean, and any remains of old fat and food must be removed. Only regular maintenance and adherence to all instructions can ensure that the appliance will last a long time, operate well, and prepare high-quality foods.

Once work is over, close the appliance's water feed! Leave it open only if it is connected to a water treatment device requiring regular regeneration. When the supply is closed, regeneration would not take place, and the water treatment device would not work properly.

The warranty does not apply to damage caused by failure to follow these instructions or caused by inadequate cleaning!

To clean the appliance, the following are not to be used:

- a high-pressure cleaning device
- coarse or sand-based cleaning agents
- objects for mechanical surface cleaning (wire brushes, scrapers, knives)

The warranty does not cover damage arising caused by detergents other than those recommended by the manufacturer, or by use of detergents recommended by the manufacturer in contradiction to the manufacturer's recommendations!

If the appliance is defective or does not behave normally, stop using it, unplug it, and contact an authorized service company.

⚠

Before using or maintaining the appliance, become thoroughly familiar with all instructions, prohibitions and recommendations in the chapter on safety INSTRUCTIONS (see "Basic information", chapter 2 "Safety instructions").

Do not spray water on the door glass and lights if the internal temperature is above 65°C — this may break the glass!

MAINTENANCE OVERVIEW

PROGRAM	DESCRIPTION	DESCRIPTION OF TASK
Daily	Cooking chamber	Cleaning with the automatic program and ACTIVE CLEANER
	Door seal	Manual cleaning using a cloth, detergent and water
	Exterior	Manual cleaning using a soft rag and substance for treating stainless steel and glass
Weekly	Cooking chamber	Cleaning with the automatic program and VISION DESCALER
	Space behind the inner wall	Hand cleaning using Manual Cleaner or PURON K and the following RINSE program
	Air filter	Hand cleaning with detergent or in a dishwasher
	Cleaning door and glass	Hand cleaning using cloths and appropriate cleaning agents
Every six months*	Boiler	Descaling with the automatic program and STRIP-A-WAY descaler
Yearly	Entire appliance	Inspection by an authorized company

* applies only to appliances with a boiler

AUTOMATIC CLEANING

The ORANGE VISION combi oven is equipped with an automatic cleaning system, which ensures that the combi oven will always be perfectly hygienically clean.

Regular use of this automatic cleaning system saves you time and significantly prolongs the life of the appliance.

Thanks to this system, the only cleaning tasks on this appliance are:

- choosing the right cleaning program for the level of soiling
- starting the cleaning program and adding detergent.

BASIC INFORMATION AND WARNINGS



For automatic cleaning, you must use the Active Cleaner detergent, which is packed in 60 g plastic bags. It is delivered in small buckets containing 50 packs.

The detergent's package protects it from moisture damage, nevertheless it should be stored in places where no water or excess humidity is present. Always use the detergent immediately after opening the package. Never leave it open, and most importantly, do not leave it in damp places or unsupervised.

Important information:

- **If a detergent other than original Active Cleaner is used (Retigo Manual Cleaner, Vision Descaler), Retigo takes no responsibility for any damage, and the warranty does not apply to damage caused in this way.**
- **Keep the detergent out of the reach of children.**
- **When handling the detergent, follow all rules for working safely with chemical substances, and especially use safety gear (primarily gloves and protective glasses).**
- **Follow the instructions on the detergent package.**
- **The detergent must never come into direct contact with the skin, eyes or mouth.**
- **Never open the appliance's door when the cleaning program is running – this can cause a chemical exposure hazard.**
- **Also remove gastronorm pans from the combi oven before cleaning it.**
- **Follow all instructions shown on the appliance's display.**
- **After using the detergent, do not leave the detergent package in the cooking chamber.**
- **Never spill the detergent on the appliance's hot surface — this can irreversibly damage the stainless steel surface. The warranty does not apply to appliances damaged in this way.**
- **If cleaning is inadequate, fat build-up in the appliance's cooking chamber may ignite during ordinary operation.**

The combi oven has six cleaning programs. Which program to use depends on the level of soiling in the cooking chamber

PROGRAM	NAME	DETERGENT	DURATION*
1.	Expres cleaning	Active Cleaner 1 pack	00:29:01
2.	Basic cleaning	Active Cleaner 1 pack	00:49:21
3.	Medium cleaning	Active Cleaner 1 pack	01:15:06
4.	Extra cleaning	Active Cleaner 2 packs	01:49:00
5.	Water rinse	No	00:16:50
6.	Descaling of cooking chamber	Vision Descaler 1 packs	01:15:06

*** The cleaning times are for reference only and may differ slightly depending on the size of the appliance.**

Depending on the size of the combi oven and the cleaning program chosen, it is also necessary to select the right amount of detergent. The amount of cleaning agent needed depends on the degree and character of the appliance's grime.

PROGRAM		SIZE OF COMBI OVEN					
		RECOMMENDED MINIMUM AMOUNT OF DETERGENT (units)					
		623	611	1011	1221	2011	2021
1.	Expres cleaning	1	1	1	2	2	3
2.	Basic cleaning	1	1	1	2	2	4
3.	Medium cleaning	1	1	1	2	2	4
4.	Extra cleaning	1	2	2	3	3	5
5.	Water rinse*	0	0	0	0	0	0
6.	Descaling of cooking chamber**	1	1	1	2	2	3

*** Water rinse is program without using any cleaning agent'**
**** For descaling of cooking chamber always use Vision Descaler**

When handling the detergent, follow all rules for working with chemical substances!

ADDING DETERGENT



- Cut open the detergent bag at the place indicated
- Pour the entire contents of the package on to the drain lid at the bottom of the cooking chamber. Most of the powder will fall through into the drain hole.
- close the combi oven door

STARTING THE CLEANING

1	**PRESS**	
2	**CHOOSE CLEANING**	
3	**PRESS**	
4	**CHOOSE PROPER PROGRAM**	
5	**PRESS** It appears **PRESS START**	
5	**TO START THE CLEANING PRESS**	
	TO RETURN TO THE MAIN MENU PRESS	
6	**COMBI OVEN WILL ASK YOU TO INSERT A DETERGENT**	

When Start is pressed, the combi oven automatically checks that the temperature inside the cooking chamber is not too high. If the temperature is above 80 °C, the automatic process for cooling the cooking chamber will begin. If the temperature does not exceed 80 °C or cooking chamber cooling has finished, your appliance will prompt you to add detergent.

- **When the cleaning process has finished, check the cooking chamber. Remove any remaining detergent by thoroughly rinsing with the hand shower or cleaning with water. If this isn't done, the stainless-steel surface of the cooking chamber can distort and discolour when the appliance is used at high temperatures. The warranty does not cover damage caused in this way!**
- **Do not disconnect the electricity to the combi oven during cleaning. Bits of detergent may remain in the cooking chamber.**
- **Do not wash the combi oven using equipment that works with high water pressure.**
- **If the combi oven won't be used again after cleaning, we recommend leaving the door ajar, for example overnight**
- **Dispose of the detergent package as usual, by putting it in a place reserved for plastic bags.**
- **Never leave used packages lying around freely accessible.**

DESCALING OF COOKING CHAMBER

Descaling is recommended when there are visible lime scale deposits in the cooking chamber (a white layer of water scale), this depends on water hardness. To perform descaling on the RETIGO Vision combi steamers it is necessary to use a special agent called Vision Descaler. The Vision Descaler is applied in the same way as the Active Cleaner. The standard package size for the Vision Descaler is a plastic bucket containing 25 bags weighing 150 grams each.

retigo®

COMBI OVEN SPECIALIST

RETIGO

Láň 2310, PS43

756 64 Rožnov pod Radhoštěm

Czech Republic

Email: info@retigo.com

Tel.: +420 571 665 511

www.retigo.com

Complete operation manual could be found here

ver. TSD-15-O-MAN-EN_R04

ver. SW: 3.71