retigo®

PERFECTION IN COOKING AND MORE...

Retigo
Orange Vision Plus

USER'S MANUAL

Complete instructions for use can be found here:



READ THIS MANUAL BEFORE USE

DESCRIPTION OF THE MOST COMMON SCREENS

A MAIN SCREEN

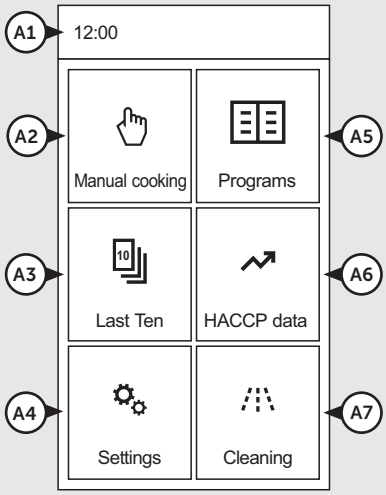

A1	Current time
A2	Manual cooking setup
A3	Selecting previously used programs / baking or cooking methods
A4	User and service settings
A5	Selection from saved programs
A6	Shows the history of all programs started on the equipment with a HACCP data record
A7	Active Cleaning automatic cleaning

B MANUAL MODE

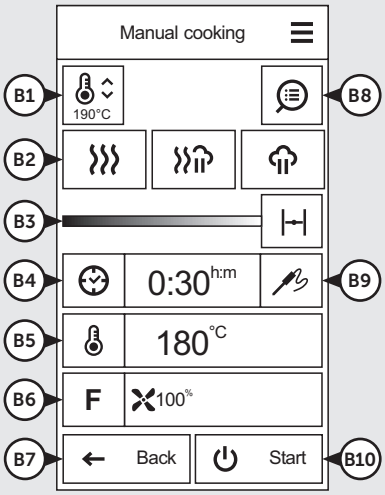

B1	Option Preheat/Cool
B2	Cooking mode selection
B3	Humidity selection
B4	Setting the time
B5	Setting the temperature
B6	Settings for other functions
B7	Step back
B8	Overview of program steps
B9	Temperature probe settings
B10	Start cooking

C PROGRAM DETAILS (QUICKVIEW)

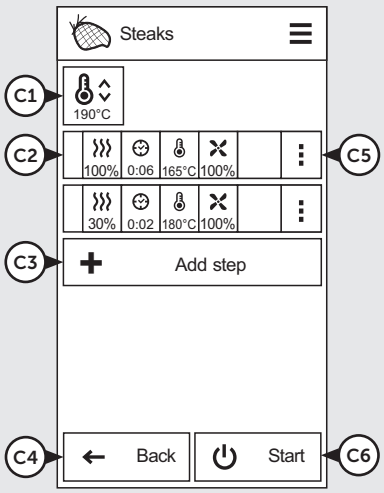

C1	Option Preheat/Cool
C2	Step parameters
C3	Enter another program step
C4	Step back
C5	Enter/delete a program step
C6	Start cooking

D END OF COOKING

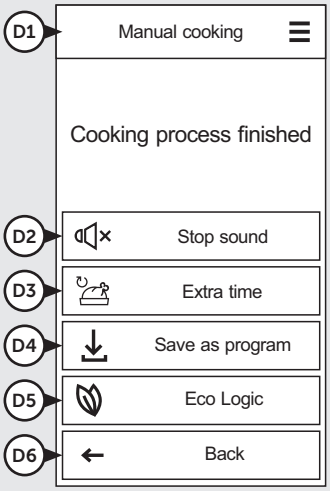

D1	Information about the selected mode/ program for the cooking process
D2	Disable the sound signal
D3	Option to immediately extend the last cooking step
D4	Save the completed cooking process as a program
D5	Display power consumption during the cooking process
D6	Return to the last screen before pressing the START button

ABOUT THIS MANUAL

Complete instructions for use can be found here:

VALIDITY OF DOCUMENTATION

This manual relates to RP type appliances and the following models:

ELECTRICAL MODELS

2E0623IA, 2E0611IA, 2E0611BA, 2E1011IA, 2E1011BA, 2E2011IA, 2E2011BA, 2E1221IA, 2E1221BA, 2E2021IA, 2E2021BA.

GAS MODELS

2G0611IA, 2G1011IA, 2G2011IA, 2G1221IA, 2G2021IA.

USE: WHAT IT'S FOR

The Orange Vision Plus combi oven is a universal appliance for preparing meals, including complete menus. It can be used for all types of food preparation methods based on heat, for example baking, frying, grilling, stewing, steam cooking, low-temperature overnight cooking, etc. The process is performed either in manual mode or in automatic mode utilising programs.

CORRECT USE OF THE APPLIANCE

- The appliance can be used only for heat preparation of various types of food. This involves steam, hot air or a combination of the two. The food must always be placed in standardized gastronorm containers, baking trays dimensioned for baking or standard accessories exclusively from the manufacturer.
- The cooking containers that are used must be made of stainless steel, ceramics, heat-resistant plastic or enamelled steel.
- The appliance is exclusively for professional use in the culinary field.

LIMITATIONS ON THE USE OF THE APPLIANCE

The following must not be placed in the appliance:

- no food in enclosed jars or packaging
- no easily flammable items with an ignition point lower than 260 °C, such as for example low flash point oils, fats, wipes (wiping cloths)
- no dry powder or granulate

DESCRIPTION OF THE APPLIANCE

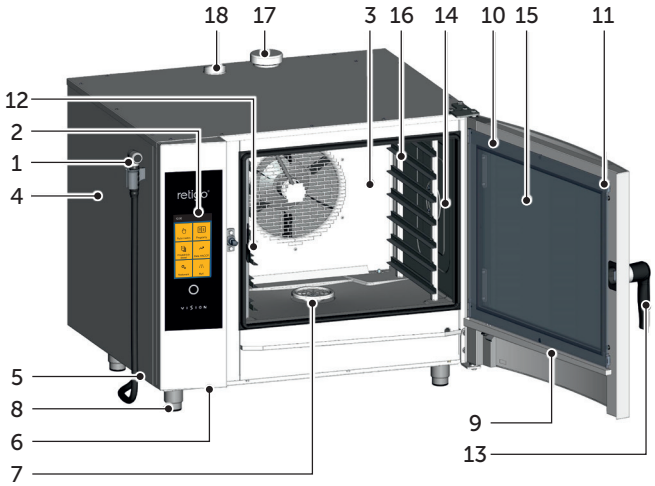

1. Hand shower (optional equipment)
2. Control panel
3. Detachable interior wall in front of fan
4. Side cover
5. Air and dust filter
6. USB connector
7. Drain cover
8. Height-adjustable legs
9. Condensation drip pan for the inner glass with automatic draining
10. Door with rounded exterior glass
11. Inner glass fastening clips
12. Temperature probe (optional equipment)
13. Door handle
14. Interior lighting
15. Openable inner glass of the door
16. Gastronorm container racks
17. Excess steam venting flap (optional equipment)
18. Venting chimney

Any use of the appliance beyond this application areas, including modifications to safety or operational components without the manufacturer's permission, is considered to constitute use not conforming to its purpose. The company accepts no liability for damages resulting from such use; the user bears all risk.

The user is also responsible for abiding by the conditions prescribed by the manufacturer for installation, operation and maintenance of the appliance, which must be maintained and repaired only by persons familiar with it and instructed on its hazards.

SAFETY DURING USE

The appliance cannot be operated without a certain amount of caution, alertness and common sense. Even though the appliance has been designed and manufactured to meet all international safety standards, the user bears primary responsibility for his or her personal safety while operating the appliance. The manufacturer of the appliance bears no responsibility for personal injury, equipment damage or environmental damage caused by failure to operate the appliance according to the manual or by failure to follow applicable safety regulations.

This chapter provides the most important information on working safely and protecting the health of the user and all others who come into contact with the appliance or its accessories.

SAFE OPERATION

GENERALLY

- The appliance may only be used by personnel authorised, qualified and trained for operating it. Persons who are not authorised to use and have not been trained in its operation must never be allowed to handle or maintain it, or to perform any activity contrary to its use. Such unprofessional activity may cause injury or damage the appliance.
- Arrange for regular training on how to operate the appliance. This prevents occupational injuries and damage to the appliance.
- This appliance is to be used only for food preparation and in compliance with the manual. Any other use is in conflict with its purpose and is considered dangerous.
- For safety reasons, do not remove the hard covers or try to get inside the appliance - risk of injury by electrical shock. The device contains no components that the user can handle. Repair of any defects or maintenance beyond that described in this manual must be done by a qualified service technician.
- Do not install any heat sources in the immediate area of the appliance (such as fryers, grills, cookers, hot plates, etc.).

Detailed requirements related to the location of the appliance are provided in the transport and installation instructions.

- Do not work with the appliance if you suffer from dizziness, fainting or other weakness or lack of concentration or if under the influence of drugs or alcohol!
- It is strictly forbidden to remove or damage the labels fastened to the appliance.
- Only operate the appliance in perfect working order. Do not make any changes to it.
- Follow the prescribed inspection plan, follow the instructions in the user's manual, adhere to generally applicable regulations for gas appliances.
- Do not place anything near the appliance that you could trip over. Keep the workplace (including access ways) clean and tidy.

OPERATING ENVIRONMENT FOR THE APPLIANCE

- The permitted ambient temperature range is +4°C to +35°C.
- The environment must not be explosive or toxic.
- A fire extinguisher or an automatic fire extinguishing system must not be located directly above the appliance.
- There must be no flammable materials, gasses or liquids located underneath or next to the appliance.

BEFORE USING THE APPLIANCE

- Before starting the appliance, it is absolutely necessary to study the chapter **"Safety during use"**, along with this chapter.
- If you have any doubts about the appliance's installation, operation or safety, contact your supplier.
- In the event that any damage occurs to the electrical equipment, it is necessary to organise repairs without delay; a damaged appliance must not be used.
- Do not block the appliance's vents with objects, and especially do not place cooking utensils, fabrics or other items on the appliance. Make sure that steam freely escapes from the vents at the top of the appliance.
- Before using, check the appliance's cooking chamber. Remove all remaining food, cleaning agent residues or other objects, and thoroughly rinse the cooking chamber with the hand shower.
- Be sure not to sprinkle or spray water on the appliance, and do not place objects filled with water on it.
- Do not place sources of open flame on or near the appliance.

DURING USE OF THE APPLIANCE

- Do not continue using the appliance if you have the slightest doubt as to its safe operation or whether it is damaged. Turn it off immediately, unplug the power cable, shut off the water supply, and contact your supplier.
- If noise increases beyond the permitted limit while the while you are using the appliance, stop the appliance and fix the cause.
- Immediately report all faults to your superior, who must arrange for their repair.
- Do not leave the appliance unattended while it is turned on, unless explicitly instructed to by the manual.
- Use only your fingers to operate the control panel buttons. Using sharp, pointed or other objects to operate the appliance voids the warranty.
- When working with the appliance, be aware that gastronorm containers, cooking inserts and grates can be hot. The temperature of the external glass on the door may reach temperatures higher than 60°C. In all cases there exists a risk of burns.
- Hot steam is generated while the appliance is running – when the door is opened, there is a risk of scalding, etc. When opening the door, especially during steam operations, always stand in such a way that you cannot be scalded by the steam escaping from the open door. Open the door only partially and do not open fully until the steam has escaped.
- If gastronorm containers are more than three-quarters filled with liquid, greater care must be taken when handling and removing them. When placing containers this full into the appliance, put them only in racks into which you can see. Otherwise, the user may be scalded. Take great care when removing hot gastronorm containers — whatever their content!
- Be especially careful when working with an appliance (set of appliances) whose highest rack is 160 cm or higher above the ground. Here there is a risk that the gastronorm container may flip over and cause burns.
- Hot areas may form during the cooking process, especially on the cookware, grills and the inner side of the door. Use protective gloves whenever handling hot objects.
- It is forbidden to start the fan without the cover. If the appliance is equipped with a ride-in trolley, then you must always brake the trolley once inside the appliance. When handling a full trolley, the gastronorm container locking mechanism must always be used (GNs are closed).
- When transporting gastronorm containers filled with a liquid, they must be covered with sealing lids. Otherwise, the user may be scalded.

- In the event that the floor is very uneven, ride-in trolleys must not be used for riding into or out of the appliance. Never leave the trolley handle inside a closed appliance. This may break the appliance's door. Do not pull the ride-in trolley without the handle designed for this purpose. Otherwise, this may result in burns.
- When using banquet trolleys, always make sure that the plates are correctly seated on the stands.
- For cleaning the trolleys, always use the automatic cleaning program (if available). Otherwise, use cleaning products designed for semi-automatic cleaning. It is not permitted to use the appliance without the ride-in trolley for standard work and automatic cleaning!

AFTER YOU HAVE FINISHED WORKING WITH THE APPLIANCE

- Perform cleaning and service only when the appliance is cold!
- Remove solid pieces of food by taking them out of the cooking chamber — never flushing them down the appliance's drain.
- Cleaning and descaling agents are to be used only according to the instructions in this manual and in compliance with the instructions for the individual agent.
- After work (e.g. overnight), leave the appliance's door ajar.
- When the appliance is not used for an extended period of time, shut off the water and power supply.

WHEN CLEANING

- Use extra caution when handling cleaning agents. Contact with cleaning agents and their fumes poses a hazard of burns or irritation to skin, eyes and respiratory organs.
- When handling cleaning agents, wear safety equipment.
- When dosing powdered cleaning agents, be extra cautious that they are not inhaled and do not come into contact with eyes and mucous membranes.

PROTECTIVE AIDS

When operating the appliance, it is also necessary to wear the right clothes and use personal protection gear. Clothing, shoes and protective gear must comply with national safety requirements for your type of work. Especially do not forget to use these important items:

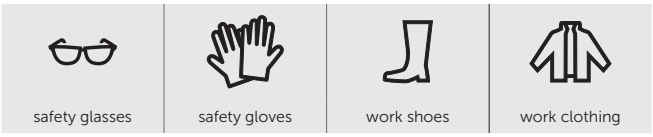

When working with the appliance, we do not recommend wearing:

- Scarves, neck ties, chains, watches, bracelets, keys, rings or other metal objects, or work with an inappropriate bandage on.
- Electrical components such as heart pacemakers, watches, credit cards, etc., or other items with magnetic recording media.
- Long, loose hair. Secure long hair with an appropriate head covering.

PROTECTIVE ELEMENTS OF THE APPLIANCE

The appliance is equipped with safety elements that make it safer to operate. Here is a list of the most important ones:

1. External main switch
2. External covers
3. Safety temperature limiter
4. Control panel
5. Door with magnetic switch
6. Ventilation position of the appliance's door
7. Internal wall

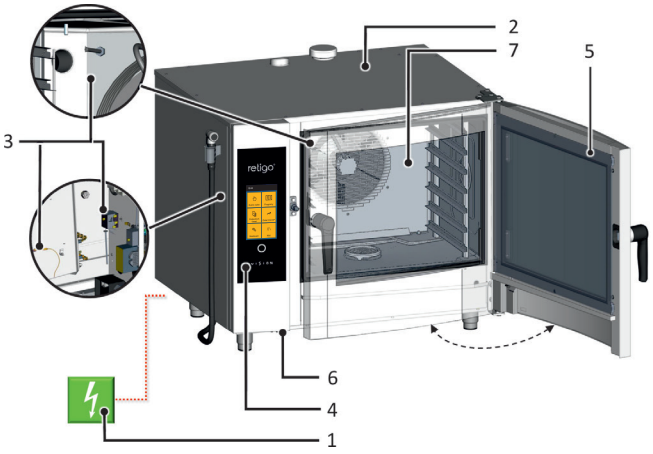

None of the elements below are intended to be removed by the operator. They can be removed for inspection, maintenance or repair only by a person qualified for the task.

EXTERNAL MAIN SWITCH

The appliance is designed for permanent connection to the power grid. Connect and disconnect the power supply using an external main switch. The switch is used for turning the appliance on and off (when starting operation, making repairs, installing, and also in emergencies). The external main switch must be easily accessible at all times!

It is forbidden to tamper with safety circuits, to remove the side covers, or to perform any unauthorised changes, which change the reliability and safety of these circuits.

EXTERNAL COVERS

All removable covers are firmly connected to the appliance, so they can be removed only with tools. Covers prevent unintentionally touching parts carrying electricity. Always check whether the covers are in place.

SAFETY TEMPERATURE LIMITER

Safety temperature limiters are located in the cooking chamber, boiler and electrical panel. When there is excessive temperature, these elements activate and turn off the appliance. When there is excessive temperature, these elements activate and turn off the appliance.

If a safety limiter fails, an error code is displayed accompanied by an audible signal.

CONTROL PANEL

The control panel is located outside the area prone to high temperatures and makes it possible to quickly turn off the appliance using the STOP button. The display also shows malfunctions.

The control panel is securely fixed to the front control panel and prevents unintentionally touching conductive parts. It can be removed only with a tool.

DOOR WITH MAGNETIC SWITCH

The moment the door opens, the heat automatically shuts off and the fan quickly stops to limit the escape of steam from the cooking chamber. To protect against steam scalding, first open the door slightly and wait a while before opening it fully. To close the door, push on the handle (by slamming).

If the door is not closed properly and the appliance is in the **Start** mode, a "close door" prompt will appear.

VENTILATION POSITION OF THE APPLIANCE'S DOOR

To protect against steam scalding, the door can first be opened slightly. In this position, the door remains partly locked. Once steam stops coming out of the cooking chamber, the door can be opened completely.

INTERNAL WALL

It is always located inside the cooking chamber in front of the fan so as to prevent striking against the fan's rotating wheel. The internal wall can only be removed with tools.



Under no circumstances should you remove any safety or protective element of the appliance! Do not make any changes to it without the permission of the manufacturer.

DANGEROUS LOCATIONS AND RESIDUAL HAZARDS

The appliance is designed so that when properly used in perfect technical condition, it poses no danger to the operator or surroundings. Nonetheless, during its operation, situations may arise that could be dangerous if the user is not aware of them. These are called residual hazards — those that remain even after all preventive and protective measures have been considered and implemented. Spot these hazards early and avoid them.

Dangerous locations, types of hazards and their effects.

COOKING CHAMBER

While it is running, the appliance generates high-temperature steam in the cooking chamber.



- Burning hazard from hot places throughout the chamber.
- Burning hazard from side handles (ladders/racks) of gastronorm containers and other accessories used when heating food.
- Scalding hazard from hot steam escaping the cooking chamber when the appliance's door is opened.

FAN

In the appliance's cooking chamber, behind the internal wall, there are one or more circulating fan wheels.



- Hand injury hazard from careless handling in the cooking chamber behind the inside wall when it is not properly installed in place.
- Hand injury hazard from careless handling in the cooking chamber behind the inside wall during cleaning or maintenance.

DOOR

The inside of the door and especially the internal glass heat up to a high temperature when the appliance is running. The appliance also generates hot steam that escapes when the door of the cooking chamber is opened.



- Risk of burns from the inside of the door when opening the door during or after the cooking process.
- Risk of scalding by hot steam and fumes when opening the appliance, and especially when the top of the door is at face level, as it is with sets of appliances.

UPPER COVER OF APPLIANCE

Never cover the appliance or place on it any objects that may catch fire. Your appliance is not a storage shelf!

Be careful and use safety gloves.



- Risk of burns during the cooking process.
- Fire hazard if the cover is covered or if flammable materials are on the cover during the cooking process.

GASTRONORM CONTAINERS

Never handle containers above eye level that contain hot liquids or hot liquid food, and always use safety gloves.



- Risk of burns during improper handling of hot accessories when removing them from the appliance after cooking.

FLAP AND CHIMNEY

Do not place any part of the body above these parts and always use safety equipment (gloves, safety glasses, etc.).



- Burning hazard from steam escaping during the cooking process.

HAND SHOWER



- Scalding hazard from hot steam or hot fat when spraying a hot cooking chamber.
- Do not use the hand shower for cooling down the cooking chamber or for cleaning when its temperature is greater than 90 °C.
- Scalding hazard from hot fat and steam when water splashes into hot fat.
- Do not spray water directly into hot fat — this may cause spattering and intense steam generation.

Residual risks

To further reduce risks and to ensure the effectiveness of safety protection, we provide information about residual risks. To eliminate them, we have established the following technical and organizational measures for implementation by the user. These are intended to overcome the respective hazards.

ELECTRICAL CURRENT

All of the appliance's electrical components are powered by potentially fatal current. The power supply terminals and other electrical components remain under live voltage even when the appliance is turned off.



- The power supply terminals and other electrical components remain under voltage even when the appliance is turned off.

However, access to the area with electrical components is only possible after removing a rigid cover. As the user, you are not authorised to service the appliance's electrical components. There is only a hazard in the event that power supply cables of the appliance are damaged, e.g. by means of being inappropriately placed, twisted, pinched, weighed down, etc. Moreover, if the appliance moves by itself on the wheeled frame, this may break the power supply cable.



- When operating the appliance, always lock the wheels with the parking brake!

If there is any damage to the electrical equipment, it is necessary to stop using the appliance immediately and arrange immediate repair by an authorised service centre.

If it is not necessary to have the appliance under live current, disconnect the main power supply connection by turning off the main power switch.

MECHANICAL PARTS

Hazards arise only when the appliance has been installed on a wheeled frame or has been installed incorrectly (such as with a strong tilt, not anchored on a slippery or unstable surface, etc.), and its unexpected movement may cause crushing or pinching when it looses stability.



- If you think that the appliance is incorrectly installed in regard to stability, do not continue working, and immediately contact the owner to check the installation.
- Injury hazards from moving parts occur in situations where the cooking chamber is cooled with the door open — "Cool down" function , the internal wall in front of the fan is missing, so that the fan wheel is freely accessible.

When handling the appliance, adhere to the the relevant regulations for tying loads and the handling of lifting equipment.



- Make sure that the internal wall is always in its place and properly secured against loosening!
- Risk of hand injury may occur when sliding or pulling out the loading trolley or loading basket.
- When handling loading accessories, always use the handle provided for the purpose.

HIGH TEMPERATURE

During the cooking process, the appliance's interior heats to a high temperature, including containers and food that have been inserted, and after the door of the cooking chamber is opened, this heat escapes to its surrounding. For this reason, there is risk of burning or scalding when working with or near the appliance.



- Risk of burns from hot surfaces mainly occurs in the entire cooking chamber, including the inside of the door, and on all parts that are or have been inside during cooking, such as cooking containers, handles of cooking containers and grates.
- Wear the prescribed safety clothing, especially safety gloves!
- A scalding hazard from hot steam can occur when water is sprayed into the warmed-up cooking chamber or the door is open during "Cool down" function.
- Step far enough away from the appliance, and do not spray water into the warmed-up cooking chamber for fast cooling or when rinsing with the hand shower!



- A scalding hazard occurs when water is sprayed into the appliance when there is container containing hot fat inside it.
- Do not spray water into hot fat!
- There is also a water scalding hazard during improper handling of the gastronorm containers, when using gastronorm containers of inappropriate dimensions, and when using a plate of inappropriate dimensions in relation to the handle of the banquet trolley plate handles.
- When handling containers that contain hot liquids or hot liquid food, use extra caution and always use safety gloves.

WASHING DETERGENTS

When washing detergents are used, there is a risk of burning or irritation to the skin, eyes and respiratory organs from direct contact with the cleaning agent or its fumes.



- Avoid direct contact with washing detergents. If there is risk of contact, use safety gloves.
- When dosing, be especially careful not to inhale the detergent.
- During fully automatic cleaning, do not open the appliance's door unless prompted by the software — there is danger of inhaling washing detergent fumes or splashing skin and eyes.

FOOD CONTAMINATION

When cleaning or descaling agents are used incorrectly, the area around the appliance, where food is usually prepared, may become contaminated. This may result in food contamination.



- Make sure the work surface has not been splashed with washing detergent or descaler!
- Do not place empty containers on the work surface — the food may get contaminated!

WATER

If the appliance and its wheeled cart begin making undesired movements, this may break or damage the water supply line, and the escaping water may cause slips and falls.



- Before operation, always check that the wheels are locked with the parking brake! Keep the appliance's work area and surroundings clean and dry!

USING ACCESSORIES

TEMPERATURE PROBE

When using the temperature probe, adhere to the following:

- Use the probe only for inserting into food.
- Do not insert the probe into frozen food. This can break it!
- Never forcefully bend the temperature probe's power cable.
- Never pull the probe out of the food by the cable.
- Place the temperature probe into the food in such a way that it does not lean against the door glass.
- The temperature probe may be hot — use safety gloves.
- Pull the temperature probe out of the food before removing the food from the appliance and place it into the probe holder.
- When the probe is not in use, keep it in the probe holder.
- Never leave the temperature probe hanging outside the cooking chamber — the door may close on it and damage it.

HAND SHOWER

When using the hand shower, adhere to the following:

- The hand shower may only be used for cleaning the cooking chamber.
- The hand shower works for only two minutes after the door is open. After this, it turns off automatically.
- Never use the hand shower when the appliance is hot. Allow it to cool down to under 65 °C.
- Never use the hand shower for cooling down the cooking chamber when the temperature inside the cooking chamber is higher than 90 °C — this may destroy the inner glass of the door and cause deformation of the cooking chamber!Never spray water from the hand shower on to hot door glass — this can destroy it!
- After use, always place the hand shower in its holder.

CONTROLS

TOUCHSCREEN PANEL

The meanings of buttons (icons) found on the most common screens is provided on figures A, B, C, D. The basic button functions are selected by gently tapping on the icon on the panel. The extended functions are then activated by pressing and holding down the button for longer than 2 seconds.

FREQUENTLY RECURRING BUTTONS

The system has buttons that are common for the individual modes and functions of the appliance. Their meanings are as follows:

Back	Press the button to go to the previous step.
Ok	Press the symbol to confirm your selection.
Start	Press to start the desired cooking process, cleaning, etc.
Stop	Press to stop the current cooking process and display it on screen D.

OTHER BUTTONS

	The Vision button serves to: a) switch to Multitasking mode 4/4.3 b) turn on the control system c) put the appliance into standby mode. d) screen calibration mode after holding down the button for more than 2 seconds
	Pressing the symbol will display the main screen (A).
Standby	When pressed, the control system will go into sleep mode and the screen will turn off. The sleep mode is indicated to the user by the regular flashing of the Vision button. The system is woken up by pressing the Vision button.
E/2	Pressing this button will reduce power input to the appliance by half, thanks to which power is saved while the appliance is idle.
Light Light	Press it to permanently illuminate the cooking chamber and press it again to turn the light off. Lighting it is only lit when the cooking chamber door is opened.
	Press to show or hide further lines that offer extended functions of the appliance.

KEYBOARD

The system also has keyboards. They are controlled in the same way in all modes and functions of the appliance.

BASIC NUMERICAL KEYPAD

Serves to enter values.

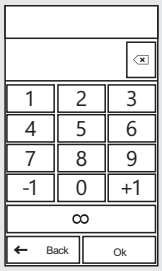

	Delete values.
-1 +1	Quick correction of values.
∞	Non-stop time, non-stop performance of a function.

EXTENDED ALPHANUMERICAL KEYBOARD

For entering letters, symbols and numbers.

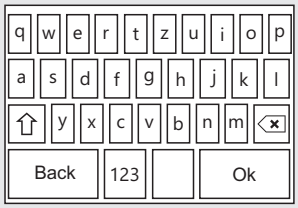

	Change case.
123	Toggle between a keyboard with letters and a keyboard with numbers/symbols.
	Delete characters.
	Space bar.

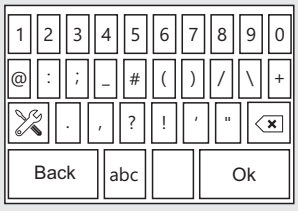

	Keyboard options. Select language and style (QUERTY-QUERTZ).
abc	Toggle between a keyboard with numbers/symbols and a keyboard with letters.
	Delete characters.
	Space bar.

MAINTENANCE

GENERAL INSTRUCTIONS

For the entire period of operation, the appliance must undergo regular inspections, tests and updates for operating this type of appliance in accordance with applicable regulations in the country of use.

The appliance must be kept clean, and any remains of old fat and food must be removed. Only regular maintenance and adherence to all instructions can ensure that the appliance will last a long time, operate well, and prepare high-quality foods.

Once work is over, close the appliance's water supply! Only keep it connected in the case that there is a water treatment device connected that requires regular regeneration. The warranty does not apply to damage caused by failure to follow these instructions or caused by inadequate cleaning!

Damages resulting from non-adherence to these instructions and caused by inadequate cleaning are not covered by the warranty!

The following must not be used for cleaning the appliance:

- high pressure cleaner
- abrasive sand-based cleaning agents or coarse-grain cleaning agents
- mechanical surface cleaning tools (wire brushes, scrapers, knives)

The warranty does not cover damages arising as a result of using cleaning agents other than those recommended by the manufacturer, or as a result of using the cleaning agents recommended by the manufacturer in contradiction to the recommendations of the manufacturer!

If the appliance is defective or does not behave normally, stop using it, unplug it, and contact an authorised service company.

⚠

Before using or maintaining the appliance, become thoroughly familiar with all instructions, prohibitions and recommendations in the chapter SAFETY INSTRUCTIONS (see "Basic information", chapter 2 "Safety instructions").

Do not spray water from the shower on the door's glass and lights, if the internal temperature is above 65 °C. This risks cracking the glass and injury to the operator!

MAINTENANCE OVERVIEW

INTERVAL	DESCRIPTION	DESCRIPTION OF TASK
Daily	Cooking chamber	Cleaning with the automatic program and Active Cleaner
	Door seal	Manual cleaning using a cloth, detergent and water
	Exterior parts	Manual cleaning using a soft rag and substance for treating stainless steel and glass
Weekly	Cooking chamber	Cleaning with the automatic program and Vision Descaler
	Space behind the inner wall	Hand cleaning using Manual Cleaner or Puron K and the following RINSE program
	Air filter	Manual cleaning with detergent or in a dishwasher
	Cleaning the door and glass	Hand cleaning using cloths and appropriate cleaning agents
Every six months*	Boiler	Descaling using the automatic program and the Strip-A-Way agent
Yearly	Entire appliance	Inspection by an authorised company

* applies only to appliances with a boiler

AUTOMATIC CLEANING

The Orange Vision Plus is equipped with an automatic cleaning system, which ensures that your appliance will always be perfectly hygienically clean.

Regular use of this automatic cleaning system saves you time and significantly prolongs the lifespan of the appliance.

Thanks to this system, the only cleaning tasks on this appliance are:

- choosing the right cleaning program for the level of soiling
- starting the cleaning program and adding detergent

AUTOMATIC CLEANING: WHAT YOU SHOULD KNOW



For automatic cleaning, you must use the Active Cleaner detergent, which is packed in 60 g plastic bags. It is delivered in small buckets containing 50 packs.

The detergent's package protects it from moisture damage, but it should nonetheless be stored in places where no water or excess humidity is present. Always use the detergent immediately after opening the package. Never leave it open, and most importantly, do not leave it in damp places or unsupervised.

Important:

- **If a detergent other than the original Active Cleaner is used (or Manual Cleaner, Vision Descaler), Retigo takes no responsibility for any damage, and the warranty does not apply to damage caused in this way.**
- **Keep the detergent out of the reach of children.**
- **When handling the detergent, follow all rules for working safely with chemical substances, and especially use safety gear (mainly gloves and protective glasses).**
- **Follow the instructions on the detergent package.**
- **The detergent must never come into direct contact with the skin, eyes or mouth.**
- **Never open the appliance's door when the cleaning program is running – this can cause a chemical exposure hazard.**
- **Before cleaning, remove all gastronorm containers from the appliance.**
- **Follow all instructions shown on the appliance's display.**
- **After using the detergent, do not leave the detergent package in the cooking chamber.**
- **Never spill the detergent on the appliance's hot surface — this can irreversibly damage the stainless steel surface. The warranty does not apply to appliances damaged in this way.**
- **If cleaning is inadequate, fat build-up in the appliance's cooking chamber may ignite during ordinary operation.**

The appliance has six cleaning programs. The program that is to be used depends on the level of soiling in the cooking chamber – see the table below.

PROGRAM	DESCRIPTION	DURATION *
	Water rinse - rinse of the cooking chamber with lukewarm water without detergent.	14:53
	Express cleaning - Short cleaning of light soiling.	33:39
	Primary cleaning - Cleaning of light soiling.	50:19
	Medium cleaning - Cleaning of medium level soiling.	01:15:19
	Extra strong cleaning - Cleaning of very heavy soiling.	01:48:39
Ca	Descaling of the cooking chamber - Removing limescale deposits.	01:12:44

*** The cleaning times indicated apply to size 611. This data may differ slightly for appliances of a different size.**

Depending on the size of the appliance and the cleaning program chosen, it is also necessary to select the right amount of detergent. The amount of cleaning agent needed depends on the degree and character of the appliance's soiling.

- **When the cleaning process has finished, check the cooking chamber. Remove any remaining detergent by thoroughly rinsing with the hand shower or cleaning with water. If this isn't done, the stainless-steel surface of the cooking chamber can distort and discolour when the appliance is used at high temperatures. The warranty does not cover damage caused in this way!**
- **Do not clean the appliance using equipment that works with high water pressure.**
- **If the appliance will not be used again after cleaning, we recommend leaving the door ajar, e.g. overnight.**
- **Dispose of the detergent package as usual, by putting it in a place reserved for plastic bags.**
- **Never leave used packages lying around freely accessible.**

PROGRAM		SIZE OF APPLIANCE / AMOUNT OF DETERGENT (pcs)					
		623	611	1011	1221	2011	2021
	Water rinse*	0	0	0	0	0	0
	Express cleaning	1	1	1	2	2	3
	Basic cleaning	1	1	1	2	2	4
	Medium cleaning	1	1	1	2	2	4
	Extra strong cleaning	1	2	2	3	3	5
Ca	Cooking chamber descaling**	1	1	1	2	2	3

*** Water rinse is performed without detergent.**

**** Use Vision Descaler for descaling.**

ADDING DETERGENT



- Cut open the detergent bag at the place indicated
- Pour the entire contents of the package on to the drain lid at the bottom of the cooking chamber. Most of the powder will fall through into the drain hole.
- close the door of the appliance

When handling the cleaning agent, follow all rules for working with chemical substances!

STARTING THE CLEANING PROCESS

1 ENTER THE CLEANING MODE



2 SELECT THE APPROPRIATE MODE

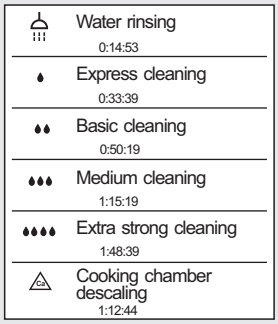

3 TO START THE CLEANING PROGRAM, PRESS
Wait for the detergent insert prompt.



TO RETURN TO THE CLEANING MODE LIST, PRESS



When Start is pressed, the appliance automatically checks that the temperature inside the cooking chamber is not too high. If the temperature is above 80 °C, the automatic process for cooling the cooking chamber will begin. If the temperature does not exceed 80°C or cooking chamber cooling has finished, your appliance will prompt you to add detergent.

DESCALING THE COOKING CHAMBER

Descaling is recommended when there are visible lime scale deposits in the cooking chamber (a white layer of water scale). To descale the appliance, the special Vision Descaler agent must be used.

This agent is applied in the same way as Active Cleaner. The standard package for Vision Descaler is a plastic bucket containing 25 bags of 150 g.

retigo®

PERFECTION IN COOKING AND MORE...

RETIGO s.r.o.

Láň 2310

756 61 Rožnov pod Radhoštěm

Email: info@retigo.cz

Tel.: +420 571 665 511

www.retigo.com

Complete instructions for use can be found here:

ver.: TSD_15_EG_EN_R00

model: Orange Vision Plus

version SW: 2.102