VISION

Orange Plus

611 ig

ig - injection gas

Default configuration: G20 natural gas, type A3 (flue gas ventilation into the working area), optional flue gas exhaust type B13 (stack exhaust) or type B23 (stack exhaust without gas cooling).



UNIQUE BENEFITS

Vision Perfect Cooking

Make your diners great reason to keep returning to your place. With Retigo Vision combi ovens, you have the peace of mind that you will always achieve outstanding cooking results. The prepared foods have a perfect colour, are juicy, crispy and healthy with a minimal fat contain.

Vision Controls

Gives you time to concentrate on cooking and things that really matter to you. The simplest controls on the market will save you time and enable you to quickly and easily make all the necessary settings. Panel response is perfect even with grease or gloved hands.

Vision Design

Simply keeps you cooking with ease and comfort. Experience an excellent combination of features, exceptional ergonomics and attractive appearance. All this with a focus on safety, hygiene and long time reliability.

Smart Investment

Generates money on savings for you every day. In-built heat exchanger, triple glazed door glass, 50 mm thick thermoinsulation combined with low consumption automatic cleaning will ensure you great return on investment.

retigo® PERFECTION IN COOKING AND MORE...

Láň 2310, PS 43, 756 64 Rožnov pod Radhoštěm, Tel. +420 571 665 511,
Fax: +420 571 665 554, prodej@retigo.cz, www.retigo.cz

Certified by:

NSF/ANSI 4

* DVGW and WRAS certificates are valid for models with retractable hand shower only.

FEATURES & BENEFITS

Cooking

- **Hot air** 30 – 300 °C
- **Combination** 30 – 300 °C
- **Steaming** 30 – 130 °C
- **Bio steaming** 30 – 98 °C
- **Over night cooking** – Saves time and money.
- **Advanced steam generation system** – Two-step water preheating with in-built heat exchanger for perfect steam cooking results.
- **Crosswise racks** – Safer and comfortable GN handling. Better product visual control.
- **Regeneration/banqueting** – Cook, chill and regenerate to serve more diners in shorther times.
- **Low temperature cooking** – Benefit from less weight loss, better taste.
- **Automatic preheating/cooling** minimises the loading temperature drop. Start cooking with the desired temperature.
- **Sous-vide, Drying, Sterilization, Confit, Smoking** – Great way to make your menu special.

Vision Controls

- **7" display** – Perfect overview, easy and intuitive control.
- **99 programs with 9 steps**
- **Continuous cooking time option** - Saves your time during busy operations.
- **Automatic start** – The ability to schedule a delayed start.

Other equipment

- **Active Cleaning** – Low-cost automatic cleaning. No chef's time spent on cleaning any more.
- **Triple glazed door glass** - Advanced energy savings and external glass that does not burn you.
- **7 Fan speeds** – Precise control of air distribution for desired results with different products.
- **Automatic Fan stop** – No scalding when the door opened quickly.
- **Auto-reversing fan** – Excellent evenness to deliver high product color and texture uniformity.
- **Massive door handle** – Comfortable and safe handling with silver ion material contain for bacteria reduction.
- **AISI 304 stainless steel** – Exceptional quality with a special coating for a extended life time.
- **Hygienic cooking chamber with round inner corners** – Trouble free maintenance.
- **Run-off tray under the door** – No slipping on wet floor.
- **Two water inlets** – Saves a water treatment unit's capacity.
- **WSS** (Water Saving System) – Special drain system & in-built heat exchanger to save water related cost.
- **Removable GN holders** with 65 mm spacing

Connectivity

- **USB plug-in** – Transfer useful data easily to and from the combi oven.
- **Ethernet/LAN** – Allows remote access for data management.
- **VisionCombi software** – Program and pictogram management in your PC, HACCP data view.

Operation logs

- **HACCP records** – Easy and immediate analysis of critical cooking points.
- **Complete operating records**

Service

- **SDS** (Service Diagnostic System) – Easy unit check up and trouble shooting.

Unit options

- Left door
- Safety door opening in two steps
- One point core probe
- Flap valve
- Standard hand shower
- Retractable hand shower
- Connection to the system for power consumption optimalization

Optional accessories

ST 1116 stand with 16 x GN 1/1
ST 1116FP flat pack stand with 16 x GN 1/1
ST 1116CS stand ST1116 with wheels
ST 1116H stand with 22 x GN1/1, height 900 mm
STAND with place for Holdomat
STAND with place for BC411P or BC511P, C
GN ADAPTER for 2 x GN1/2 or 3 x GN1/3
TRAY HOLDERS with spacing 85, 70 mm or GN 400/600
OIL SPRAY GUN
VISION SMOKER
ACCESSORIES – Gastro containers, cleaning agents, water treatments

Láň 2310, PS 43, 756 64 Rožnov pod Radhoštěm, Tel. +420 571 665 511
Fax: +420 571 665 554, prodej@retigo.cz, www.retigo.cz

TECHNICAL DATA

Model	O 611 ig+
Technical specification	2G0611IA
Heat source	Gas
Steam generator	Injection
Capacity	7 x GN 1/1
Capacity (optional)	5 x 600/400
Capacity of meals	51 – 150
Spacing	65 mm
Dimensions (w x h x d)	933 x 786 x 821 mm
Weight	127 kg
Total power	0,74 kW
Heat power	13 kW
Fuse	10 A
Voltage	1N~(2~)/220-240V/50-60 Hz
Noise level	max. 70 dBA
Water/Drain connection	G 3/4" / 50 mm
Gas connection	G 3/4"
Temperature	30 – 300 °C

STACKING OPTIONS

Lower unit	Upper unit
611	611 ig
1011	611 ig
611 ig	611
611 ig	611 ig
1011 ig	611 ig

Láň 2310, PS 43, 756 64 Rožnov pod Radhoštěm, Tel. +420 571 665 511
Fax: +420 571 665 554, prodej@retigo.cz, www.retigo.cz

DRAWINGS

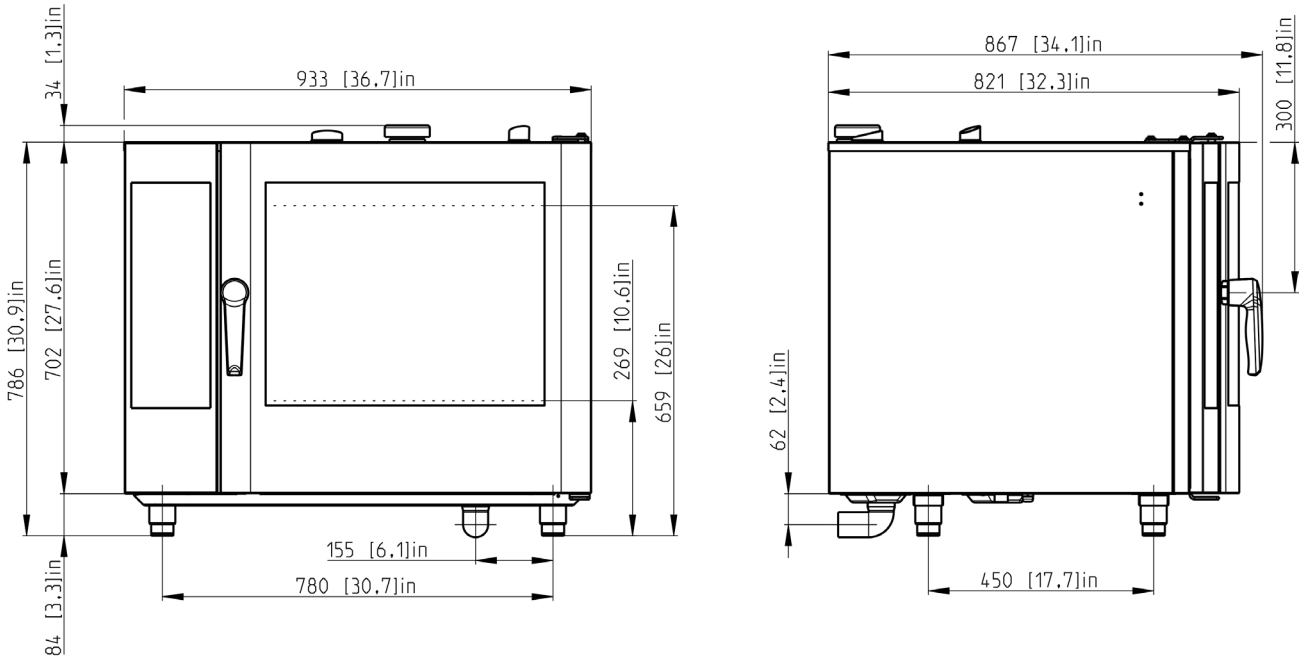

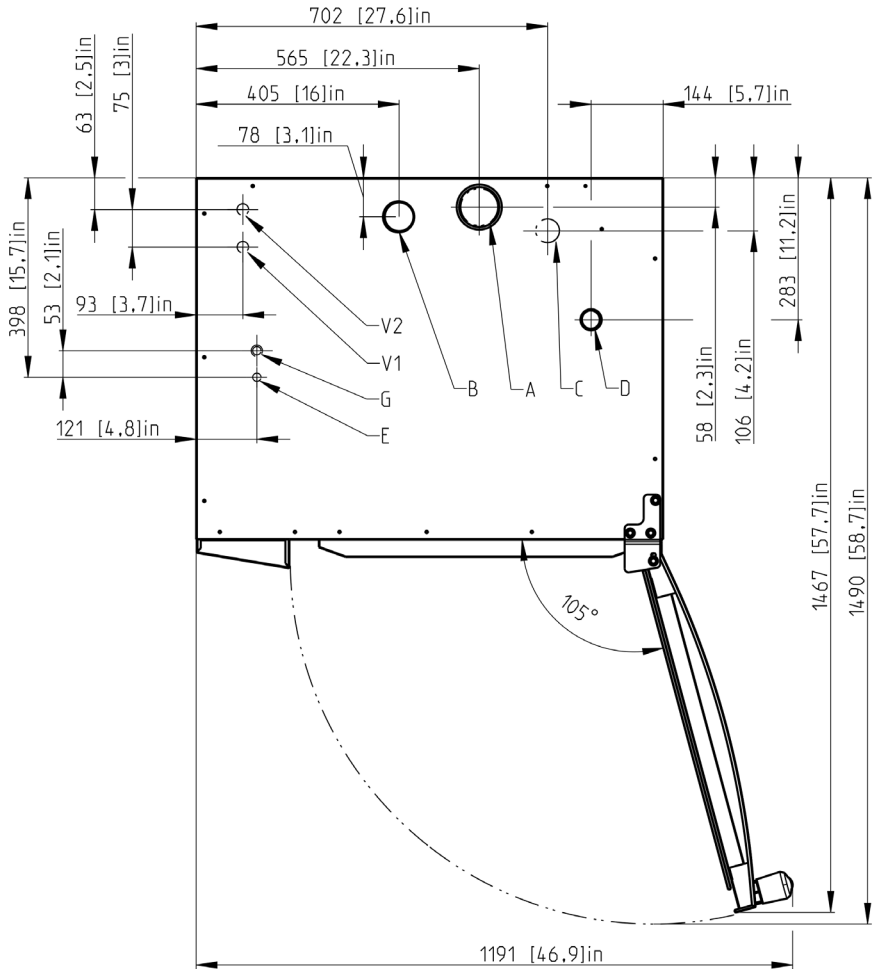

A	flap valve
B	chimney
C	waste
E	electricity
G	gas
V1	untreated water
V2	treated water

Láň 2310, PS 43, 756 64 Rožnov pod Radhoštěm, Tel. +420 571 665 511
Fax: +420 571 665 554, prodej@retigo.cz, www.retigo.cz