VISION

Blue 2011 i, b

i - injection | b - boiler



UNIQUE BENEFITS

Vision Perfect Cooking

Make your diners great reason to keep returning to your place. With Retigo Vision combi ovens, you have the peace of mind that you will always achieve outstanding cooking results. The prepared foods have a perfect colour, are juicy, crispy and healthy with a minimal fat contain.

My Vision Controls

Gives you time to concentrate on cooking and things that really matter to you. The simplest controls on the market will save you time and enable you to quickly and easily make all the necessary settings. Display response is perfect even with grease or gloved hands. Adapt the main menu to your needs.

Vision Design

Simply keeps you cooking with ease and comfort. Experience an excellent combination of features, exceptional ergonomics and attractive appearance. All this with a focus on safety, hygiene and long time reliability.

Smart Investment

Generates money on savings for you every day. In-built heat exchanger, triple glazed door glass, 50 mm thick thermoinsulation combined with low consumption automatic cleaning will ensure you great return on investment.

retigo® PERFECTION IN COOKING AND MORE...

Lan 2310, 756 61 Roznov pod Radhostem Tel.: +420 571 665 511
Fax: +420 571 665 554, sales@retigo.com, www.retigo.com

Certified by:

NSF/ANSI 4

* DVGW and WRAS certificates are valid for models with retractable hand shower only.

FEATURES & BENEFITS

Cooking

- **Hot air** 30 – 300 °C
- **Combination** 30 – 300 °C
- **Steaming** 30 – 130 °C
- **Bio steaming** 30 – 98 °C
- **Over night cooking** – Saves time and money.
- **Rack timing** – Set individual rack times for multi product cooking.
- **AHC** (Active Humidity Control) – Automatic humidity control for great cooking results.
- **Advanced steam generation system** – Two-step water preheating with in-built heat exchanger for perfect steam cooking results.
- **Crosswise racks** – Safer and comfortable GN handling. Better product visual control.
- **Regeneration/banqueting** – Cook, chill and regenerate to serve more diners in shorther times.
- **Delta T cooking** – Use advanced cooking method to reduce shrinkage on slow roasted meats getting amazing results.
- **Low temperature cooking** – Benefit from less weight loss, better taste.
- **Cook & Hold** – Let it cook and hold serving temperature.
- **Golden Touch** – Add a golden-brown, crispy finish with just a touch.
- **Automatic preheating/cooling** minimises the loading temperature drop. Start cooking with the desired temperature.
- **Sous-vide, Drying, Sterilization, Confit, Smoking** – Great way to make your menu special.

My Vision Controls

- **8" display** – Perfect overview, easy and intuitive control.
- **MyVision** – Customize your menu so you have all you need right on the main screen.
- **Touch panel** – Panel works under all conditions and has a fast response, no mechanical elements, buttons or wheels.
- **Easy Cooking** – Get great results even with less experienced chefs thanks to easy cooking guidance.
- **6-point core probe** – Allows foods to be automatically cooked to any desired internal temperatur.
- **Active Cleaning** – Low-cost automatic cleaning. No chef's time spent on cleaning any more.
- **1000 programs with 20 steps**
- **Pictograms** – Take a food picture on the main screen. Match it with a program. Touch it to get the desired cooking results repeatedly.
- **Learn function** – All cooking adjustments are recorded. At the end you save great results achieved and recall them again when needed.
- **Last 10** – Cooking process easy to be used again bu just a touch.
- **Multitasking** – Unique opportunity to work with a display during cooking.
- **Automatic start** – The ability to schedule a delayed start.
- **EcoLogic** – Energy consumption shown right on the screen. Keeps your cost under control.
- **Continuous cooking time option** - Saves your time during busy operations.

Other equipment

- **Triple glazed door glass** - Advanced energy savings and external glass that does not burn you.
- **Auto-reversing fan** – Excellent evenness to deliver high product color and texture uniformity.
- **Flap valve** – Patented dehumidification system for great colour and crispiness.
- **7 Fan speeds** – Precise control of air distribution for desired results with different products.
- **Automatic Fan stop** – No scalding when the door opened quickly.
- **Fan timing** – 3 steps for greater evenness and gentle cooking.
- **Massive door handle** – Comfortable and safe handling with silver ion material contain for bacteria reduction.
- **AISI 304 stainless steel** – Exceptional quality with a special coating for a extended life time.
- **Hygienic cooking chamber with round inner corners** – Trouble free maintenance.
- **Hand shower** – External water supply hose with spray nozzle. Extra water source at your disposal.
- **Run-off tray under the door** – No slipping on wet floor.
- **Two water inlets** – Saves a water treatment unit's capacity.
- **WSS** (Water Saving System) – Special drain system & in-built heat exchanger to save water related cost.
- **Standard loading trolley**

Conectivity

- **USB plug-in** – Transfer useful data easily to and from the combi oven.
- **Ethernet/LAN** – Allows remote access for data management.
- **VisionCombi software** – Program and pictogram management in your PC, HACCP data view.

Operation logs

- **HACCP records** – Easy and immediate analysis of critical cooking points.
- **Complete operating records**

Service

- **BCS*** (Boiler Control System) – Nothing stops you steam cooking with the in-built advance direct steam generation system.
- **SDS** (Service Diagnostic System) – Easy unit check up and trouble shooting.

Unit options

- Safety door opening in two steps
- Retractable hand shower
- Connection to the system for power consumption optimalization

Optional accessories

VO 2011 spare loading trolley
VISION VENT condensation hood
GN ADAPTER for 2 x GN1/2 or 3 x GN1/3
VISION OIL SPRAY GUN
VISION SMOKER
ACCESSORIES – Gastro containers, cleaning agents, water treatments

* for boiler combi ovens only

Lan 2310, 756 61 Roznov pod Radhostem Tel.: +420 571 665 511
Fax: +420 571 665 554, sales@retigo.com, www.retigo.com

TECHNICAL DATA

Model	B 2011 i	B 2011 b
Technical specification	2E2011IA	2E2011BA
Heat source	Electricity	Electricity
Steam generator	Injection	Boiler
Capacity	20 x GN 1/1	20 x GN 1/1
Capacity of meals	400 – 600	400 – 600
Spacing	63 mm	63 mm
Dimensions (w x h x d)	948 x 1804 x 834 mm	948 x 1804 x 834 mm
Weight	235 kg	245 kg
Total power	37 kW	37 kW
Heat power	36 kW	36 kW
Steam generator power	–	33 kW
Fuse protection	63 A	63 A
Voltage	3N~/380-415V/50-60 Hz	3N~/380-415V/50-60 Hz
Noise level	max. 70 dBA	max. 70 dBA
Water/Drain connection	G 3/4" / 50 mm	G 3/4" / 50 mm
Temperature	30 – 300 °C	30 – 300 °C

OPTIONAL VOLTAGE

3~/200-208/50-60Hz
3~/220-240V/50-60Hz
3~/400V/50-60Hz
3~/440-480V/50-60Hz

Lan 2310, 756 61 Roznov pod Radhostem Tel.: +420 571 665 511
Fax: +420 571 665 554, sales@retigo.com, www.retigo.com

DRAWINGS

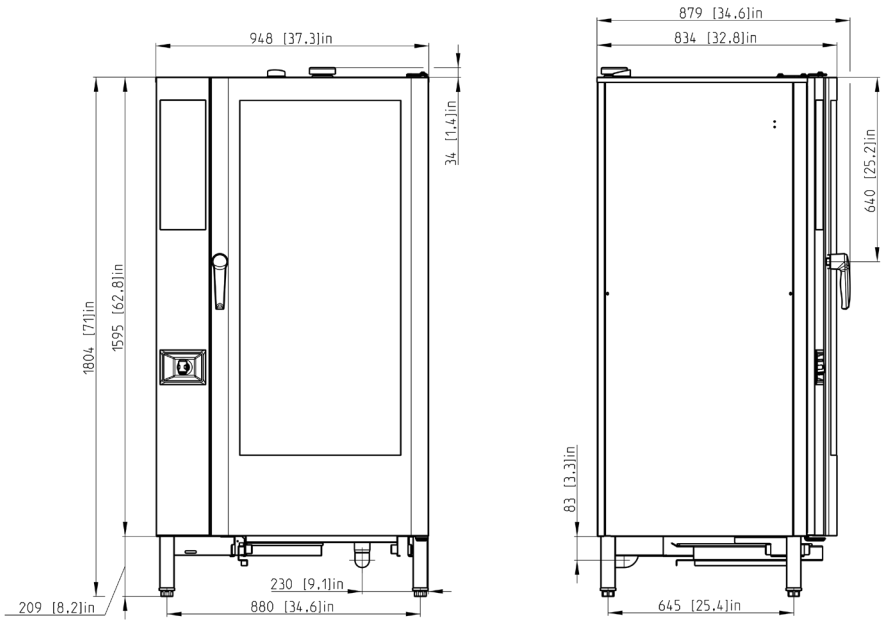

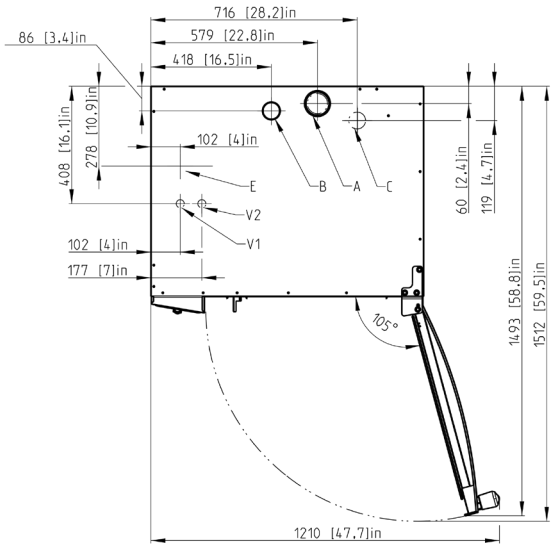

VO 2011 R

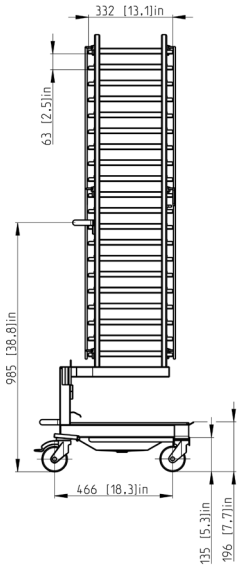

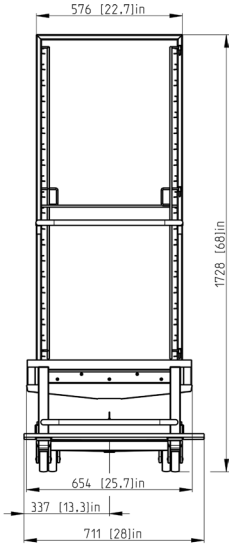

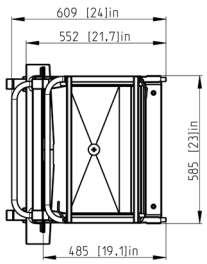

A	flap valve
B	chimney
C	waste
E	electricity
V1	untreated water
V2	treated water

Lan 2310, 756 61 Roznov pod Radhostem Tel.: +420 571 665 511
Fax: +420 571 665 554, sales@retigo.com, www.retigo.com